Roll-Over Simulation Assessment of a Paratransit Bus

[1]Efe Savran, [2]Yavuzhan Coşkun, [3]Ismail Sertesen, [4]Fatih Karpat

[1]PhD Candidate, [2]Homologation and Design Engineer, [3]R&D Manager, [4]Prof. Dr.
[1]Mechanical Engineering Department,
[1]Bursa Uludag University, Bursa, Turkey

Abstract: Vehicles are mobile structures. In vehicles, lightness, consumption efficiency, sustainability and safety are concepts that the European region attaches importance to [1]. Reducing the structural weight with the developing technology is one of the ways to reduce energy consumption and increase performance in vehicles [2]. In addition to the optimization between energy consumption and performance, structural strength and rigidity should not be ignored. Stability is more crucial when it comes to buses. Although driving assistant systems are being developed, fundamental properties of buses are still insufficient to some accident scenarios. One of the worst accident scenarios is rolling over. It is possible to make a design update on the vehicle in order to take precautions against roll-over. In order for the design update to be made, the boundary condition at the moment of the roll-over of the vehicle must be determined. Finite element method, which saves time and money, is a preferred method in many studies for determining boundary conditions. In this study, a roll-over simulation of a paratransit bus was carried out with the help of the finite element method according to the UN ECE R66 standard. The deformation results obtained at the end of the study and the deformation values in the structure were evaluated with the residual space criterion. At the same time, a section of real model of the vehicle was tested experimentally under the same boundary conditions. Experimental deformation results were compared with numerical simulation. In the results of this study, it was revealed that pillar D in the vehicle is the most critical part in the structure. The results obtained determined the focus point of the design improvement process. The results of this study revealed that the D-pillar in vehicle is the most critical part in the vehicle. The results obtained guided the design improvement process.

Index Terms: Roll-Over simulation, Paratransit bus, Assessment, Stability, Finite element analysis.

I. INTRODUCTION

Roll-over is one accident type of vehicles. This crash type is more important for the buses since their height is larger than passenger cars. Vehicles are prone to roll-over or any crash types therefore vehicle manufacturers build systems aimed with crash prevention and road holding increase. For this purpose, vehicles met with Anti-Blocking System, Electronic Stability Programme, Anti Slip Regulation, or Traction Control System at the beginning of the 21st century. Although each of these systems were developed for driving assisting and crash prevention, there is still a lack for roll-over. This problem can be overcome by virtual simulation or real-time test. Presenting safety and reliability is mandatory for bus manufacturers [3].

Purpose of ECE-R66 is to ensure that the bus superstructure is sufficiently strong to protect the passengers in the event of a rollover accident [4]. This regulation describes setup of the test and makes applicator predict the results. Requirements, loads and boundary conditions, and results are defined in. Since the standard test procedure is well-defined, it can be converted into virtual space and similar results can be obtained easily.

There are several studies on this topic and summarized the most similar to this study. Matolcsy [5] defined the severity of roll-over accident. It was stated that there are 2 ways to definition of the severity as counting the casualties and accident comparison. Test setup was well-defined. 388 rollover accidents were evaluated to rate the severity rates. Abdul Hamit et. al [6] verified the roll-over test by finite element analysis. Verification was revealed by preserving the roll-over energy types on vehicle. Test was processed in Ls-Dyna and guided by UN R66 regulation. Results showed that obtained values were between the specified limits and verification was approved. Gürsel and Gürsesli [7] modeled a bus frame and was analyses by finite element method. They took a part of full equipped frame and used it in study. During the study evaluation was made on absorbed energy by frame. After accomplishing the simulation, deformation values were obtained and absorbed energy was calculated. Results were compared to a related reference. Bojanowski, Kwasniewski, and Wekezer [8] accomplished a roll-over study on a paratransit bus by tracking the ECE – R66. Energy balance was taken into account during the study. Material susceptibility was evaluated on the model. Simulations were accomplished in Ls-Dyna. According to results, strain rate is not dominant on the bus roll-over test. Kongwat, Jongpradist, and Hasegawa [4] conducted roll-over test study on double decker bus. They aimed a design methodology that effective on torsion, bending, and roll-over stability. In the optimization stage of the study, frame thickness and weight were taken account as optimization parameters. It was said that the roof design is the most effective parameter in the roll-over situation.

In this study, the roll-over simulation of a paratransit bus was carried out using the finite element method according to the UN ECE R66 standard. The deformation results obtained from the simulation were evaluated according to the proximity of the deformed structure to the residual void volume. The friction coefficient between the vehicle and the platform was obtained by comparing the numerical simulation study with the experimental test under the same boundary conditions. In addition to determining the friction coefficient, the experimental deformation results were compared with numerical simulation.

II. MATERIAL AND METHOD

In line with the demand from the customer request, it was considered to develop a project to increase the number of passengers and luggage carrying capacity in a paratransit bus, which are more preferred by end users. Within the scope of this project, a special superstructure with the width will be designed on the chassis structure of the paratransit bus. The passenger capacity will be increased

by arranging the passenger seats with 2+1 layout as 2+2. Vehicle mass is 4719.5 kg with chassis, body, and driver. This mass value increases to 5671.5 kg if half of passenger mass included. Vehicle model illustrations was given in fig. 1.

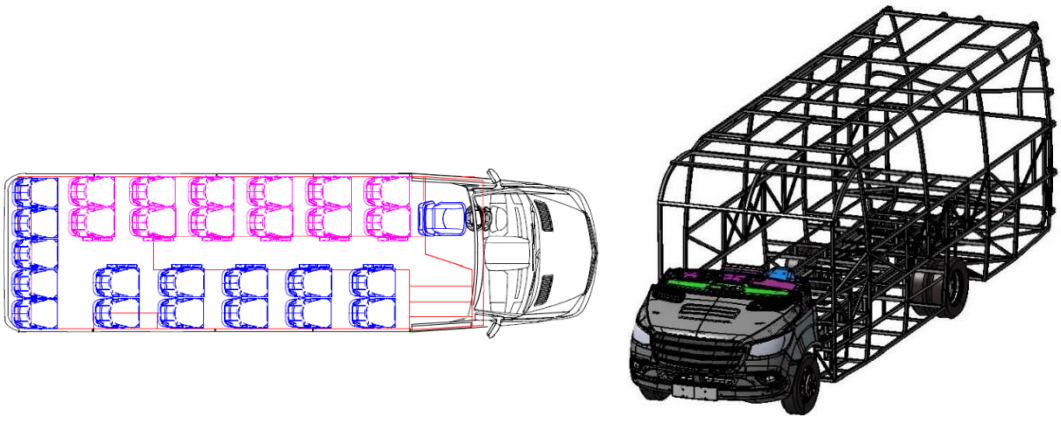

Figure 1. Tested vehicle model; Seat lay out (left), 3D model (right)

According to ECE R66, test procedure includes 800 mm height between ground surface and tire contact surface. During this test, the moving platform roll over the test vehicle at a angular velocity not exceeding 5 degrees/second. Rolling occurs on the edge of contact edge between the platform and ground. The center of gravity starts from its own position, reaches its highest level and moves on an arc to its final position. The necessary condition for the vehicle to successfully complete the test process is that no part of the bus enters the residual space during and after the rollover process. [4], [9]. Residual space and test setup can be observed in fig. 2.

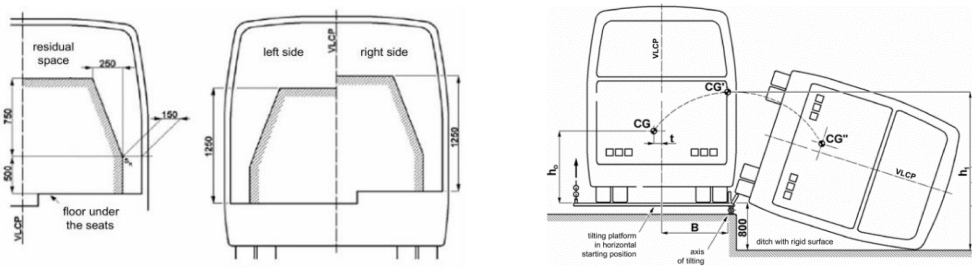

Figure 2. UN ECE R66 regulations; Residual space (left) roll-over test setup (right) [4], [9]

Roll-over simulations have been performed using LS-DYNA 971 using the finite element method. Deformable elements were used to model all structural components of the bus. Rigid bodies were primarily used to model connections between structural components. Actual stiffness values have been taken into account in conditions where joints could affect the results. Most of the geometry was modeled with the Belytschko-Tsay shell element. These elements are frequently used for crash-worthiness simulations. All of the model consists of 563948 shell elements in the finite element study. In areas with limited energy absorption, beam elements or parts of beam elements were modeled with linear beam elements. The reference and total energy to be absorbed in the roll-over test is directly dependent on the position of the vehicle's center of gravity. Therefore, its determination should be as accurate as possible. Prefered materials for tube and profiles were shared in table 1 below.

Table 1. Material properties

	Density (kg/m^3)	**Young's Modulus (GPa)**	**Poisson's Ratio**	**Yield Strength (MPa)**	**Ultimate Strength (MPa)**
Tube	7850	210	0.3	406	527
Profile	7850	210	0.3	515	580

The non-structural parts in the roof were taken into account by scaling the densities of the elements in the roof structure. Non-structural parts in the floor structure are also taken into account by scaling the density, as in the roof.

The residual space was modeled in accordance with the ECE R66.02. The residual space can be seen as large shell elements that attach to the hull structure without adding strength. They are made to give the correct distance to the actual structure of bus body. Residual space was put in a single seat at the higher floor level at the front of the bus and for the driver. The residual spaces are pointed out in the fig. 3 below.

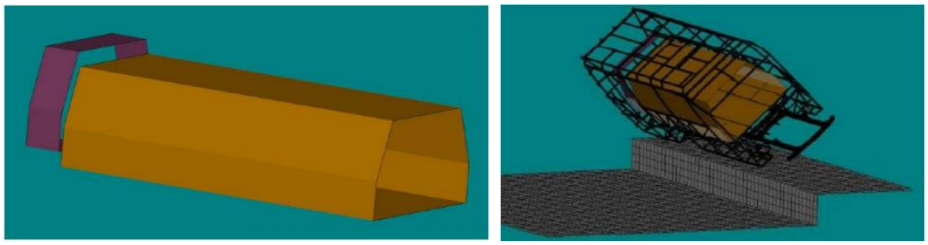

Figure 3. Residual space (left) and roll-over test setup (right) in finite element model

In the analysis, the roll over test was simulated by positioning the bus on an 800 mm high ramp. Bus rolled over the edge of the ramp with the edge as rolling center after which the bus fall on the ground. In order to shorten the analysis time, the simulation was started with the bus inclined. The analysis started by applying a predetermined angular velocity to the platform. The bus was stationary before the platform starts to move. Frictional contact was defined between the wheels and the platform. The coefficient of friction between the bus body and the ground is 0.4. This value was obtained by comparing real-time testing with computer analysis. The whole model is loaded with a gravitational load of 9.81 m/s^2.

When the vehicle hit the ground, it has reference energy of;

$$E = mg\Delta h$$

In Equation 1, M is the unladen kerb mass defined the regulation, g is the gravitational acceleration, and Δh is vertical movement distance of vehicle center of gravity.

The energy expression given in equation 1 has the following representation [9];

$$E_{ref.} = Mgh_1 = Mg\left[0.8 + \sqrt{h_0^2 + (B \mp t)^2}\right]$$

In Equation 2, $E_{ref.}$ is reference energy, M is mass of vehicle, g is gravity, h is the height of the vehicle's center of gravity when starting the rollover test. h0 is the height of the vehicle's center of gravity for the selected mass, B is the distance between the vehicle's longitudinal vertical central plane and its axis of rotation, and t is vertical distance of the vehicle's center of gravity from the center plane.

Experimental and numerical comparison was made by superimposing the test pictures from the finite element analysis of the same structure with the roll-over test performed with a produced vehicle section. The friction coefficient was converged by picture matching method between the numerical analysis and real-time test. Test procedure was illustrated in fig. 4 below.

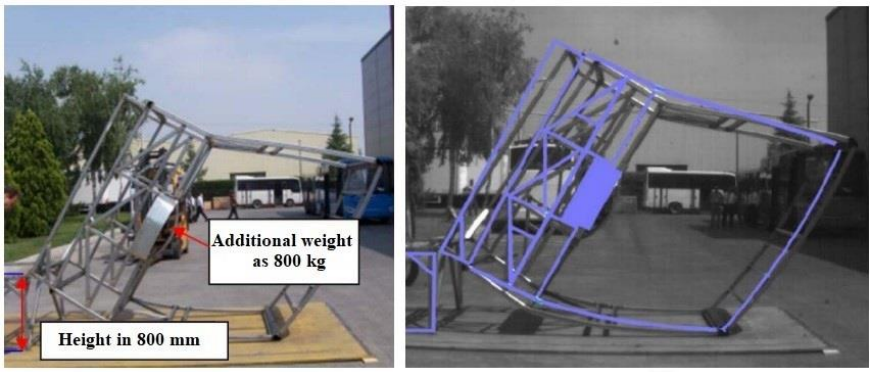

Figure 4. Numerical and experimental data comparison

III. RESULTS

As can be seen in fig. 5, the Δh value was determined as 727 mm between the highest and lowest level of the center of gravity. This value is related to the energy gained by the vehicle during the fall. The amount of energy gained will be spent on the deformation of the parts that will come into contact with the ground.

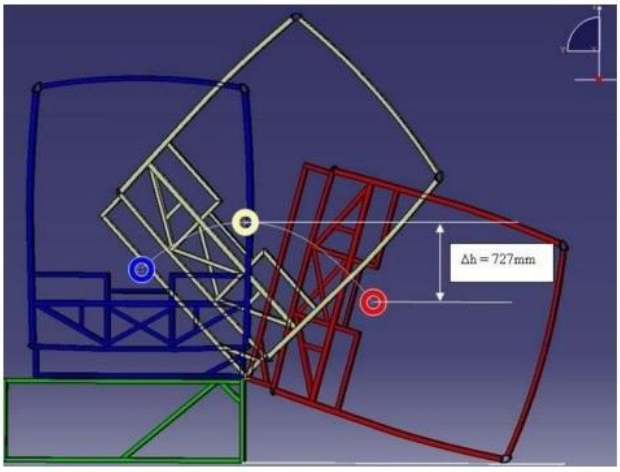

Figure 5. Tilting stages

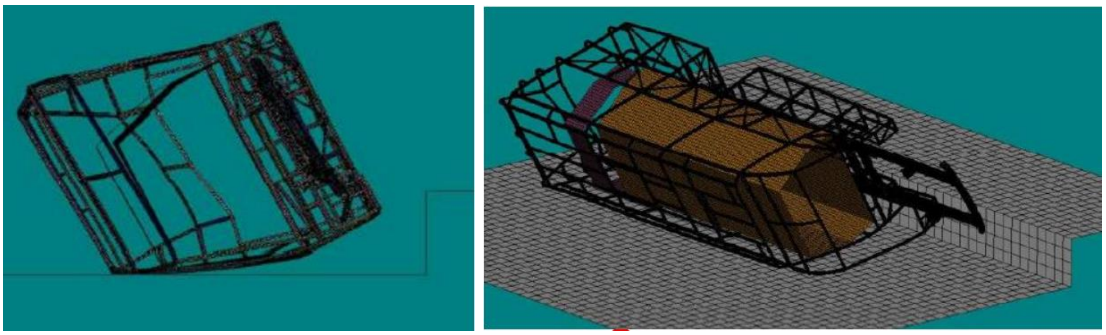

Figure 6. Finite element roll-over simulation result

Results of finite element analysis evaluated on the deformation values of separated pillars of the vehicle structure. Totally 4 pillars as A, B, C and D were taken into account for evaluation. The most critical position is at the pillar D. There is no intrusion to the residual space but the distance at upper side of the pillar D is near to 2.16 mm and at lower side is 5.83 mm. Deformation results can be observed in table 2. Lay out of pillars and measurement points are in fig. 7. All other points have a larger distance to the residual space. The distance to the superstructure is 175 mm for the seat positioned on the higher floor level in the front of the bus. The driver position in this vehicle is under floor level and the deformation of the structure in this area is limited. On the vehicle's first contact with ground, the angle between the vehicle's roof and the ground is 73.41 degree. The angular velocity of the vehicle is 2.2415 rad/s. Roll-overed vehicles illustration is in fig. 6.

Table 2. Deformation results taken from the lower and upper points of the pillars

		Pillar A	Pillar B	Pillar C	Pillar D
Point 1	Before Test	150	150	150.45	150
	After Test	24.9	39	355.12	5.83
Point 2	Before Test	355	355.21	32.05	340
	After Test	3.26	13.04	3.94	2.16

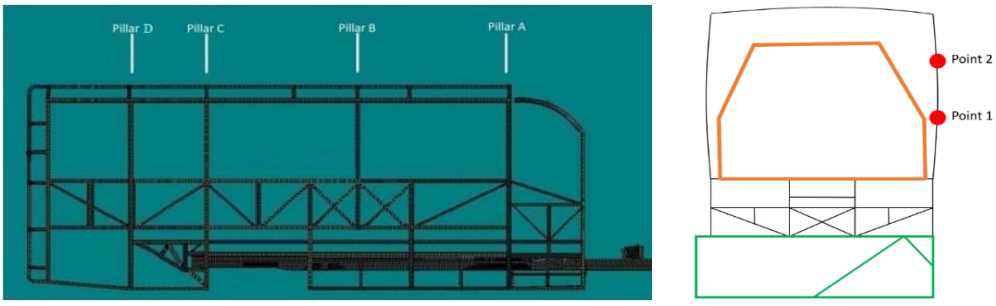

Figure 7. Pillar order (left) and measurement points (right) in vehicle structure

Evaluation criteria is distance between last position of specified part of structure and residual cage. It is the rule of vehicle success that no part enters the residual volume. Proximity to the residual volume reveals which parts are critical in this situation. Alternatively, the energy expressions was given in Equation 1 and 2. Along with information such as vehicle mass, gravity and center of gravity drop distance, energy evaluation during roll-over can also be made. In this simulation total absorbed energy value is 50526 Joule, 3886.7 Joule of total energy is Kinetic and the rest 45997 Joule is internal energy. Energy – time graphical illustration was shared in fig. 8.

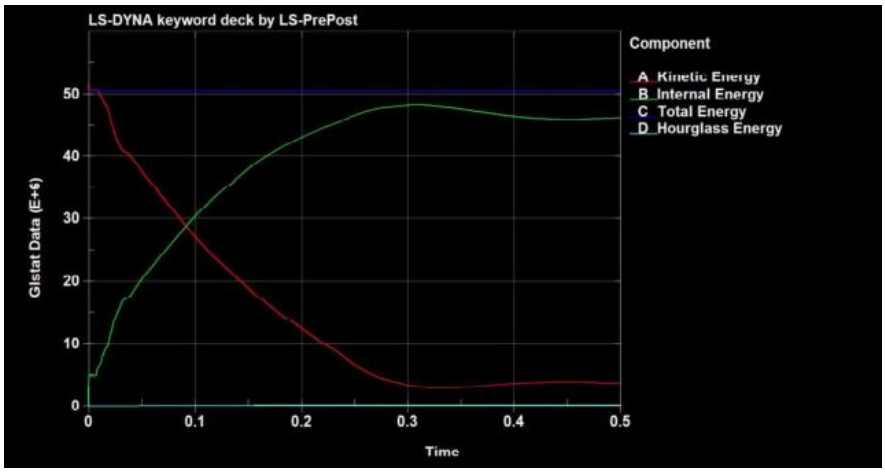

Figure 8. Energy balances from the moment of impact and forward

IV. ACKNOWLEDGEMENT

Efe Savran presents his appreciation to TUBITAK as PhD scholarship holder (Project Code:119C154). All authors would like to thank Tekaydinlar Minibus Design for technical support.

REFERENCES

1. C. Yüce, F. Karpat, N. Yavuz, Ö. Kaynaklı, E. Dolaylar, and G. Şendeniz, "Prototyping a New Lightweight Passenger Seat," *ASME Int. Mech. Eng. Congr. Expo. Proc.*, vol. 13, 2013, doi: 10.1115/IMECE2013-64381.
2. C. Yuce, F. Karpat, N. Yavuz, and G. Sendeniz, "A case study: Designing for sustainability and reliability in an automotive seat structure," *Sustain.*, vol. 6, no. 7, pp. 4608–4631, 2014, doi: 10.3390/su6074608.
3. C. C. Liang and G. N. Le, "Analysis of Bus Roll-over Protection Under Legislated Standards Using LS-DYNA Software Simulation Techniques," *Int. J. Automot. Technol.*, vol. 11, no. 4, p. 495−506, 2010, doi: 10.1007/s12239.
4. S. Kongwat, P. Jongpredist, and H. Hasegawa, "Lightweight Bus Body Design and Optimization for Roll-over Crachworthines," *Int. J. Automot. Technol.*, vol. 21, no. 4, pp. 981–991, 2020, doi: 10.1007/s12239.
5. M. Matolcsy, "The severity of bus rollover accidents," *20th Int. Tech. Conf. Enhanc. Saf. Veh.*, p. 10, 2007.
6. I. Abdul Hamid *et al.*, "Finite Element Bus Rollover Test Verification," *J. Soc. Automot. Eng. Malaysia*, vol. 3, no. 4, pp. 57–63, 2021, doi: 10.56381/jsaem.v3i4.140.
7. T. Gürsel K. and S. Gürsesli, "Analysis of the Superstructure of a Designed Bus in Accordance with Regulations ECE R 66," *Gazi Univ. J. Sci.*, vol. 23, no. 1, pp. 71–79, 2010.
8. C. Bojanowski, L. Kwasniewski, and W. J. Wekezer, "Comprehensive rollover testing of paratransit buses," *Int. J. heavy Veh. Syst.*, vol. 20, no. 1, pp. 76–98, 2013.
9. United Nations Economic Commission for Europe, "Uniform technical prescriptions concerning the approval of large passenger vehicles with regard to the strength of their superstructure," 2007.