Innovation Of Thermoelectric Generator For Powegenerat By Exhoust Gas

Prabhu G[1] Roshan Raja Sa[2], Ragul Sharma B[3],Venkadesh Sk[4]

[1]assistan Profosser, [2,3,4]students,
Department Of Automobile Engineering
Hindsthian College Of Engineering And Technology, Coimbatore,India.

Abstract : In recent years, global warming and the limitations in use of energy resources increaseenvironmental issues of emissions. Also In industry, most of the expenses are due to energy(both electrical and thermal), labour and materials. But out of them energy would relate to theManageability of the cost or potential cost savings and thus energy management will help in costreduction. The possibilities of thermoelectric systems' contribution to "green" technologies,specifically for waste heat recovery from industry exhausting flue gases. It results into extensiveresearch on green technologies producing electricity. As waste heat recovering techniques, suchas thermoelectric generator (TEG) is developed .Its implementation in automobile industry iscarried out in many ways. Previous research shows that TEG as a waste heat harvesting methodis useful. Due to distinct benefits of Thermoelectric generators, they have become a promisingalternative green technology. Thermoelectric generator direct converts waste-heat energy intoelectrical power where it is unnecessary to consider the cost of the thermal energy input. Theapplication of this technology can also improve the overall efficiency the of energy conversionsystems. Even though output of TEGs are low with available techniques, feasible electricitygeneration is possible due to waste heat emitted from the automobile (internal combustion engineoperation).

Keywords: Global warming, Exhoust gas, generator

I.INTRODUCTION

A thermoelectric generator (TEG), also called a Seebeck generator, is a solid state device that converts heat flux (temperature differences) directly into electrical energy through a phenomenon called the Seebeck effect (a form of thermoelectric effect). Thermoelectric generators function like heat engines, but are less bulky and have no moving parts. However, TEGs are typically more expensive and less efficient.Thermoelectric generators could be used in power plants to convert waste heat into additional electrical power and in automobiles as automotive thermoelectric generators (ATGs) to increase fuel efficiency. Another application is radioisotope thermoelectric generators which are used in space probes, which has the same mechanism but use radioisotopes to generate the required heat difference. Engines that burn gasoline or diesel fuel propel almost all passenger cars and light duty trucks. A schematic of the energy budget for a gasoline-fueled internal combustion engine vehicle.

About 70% of the available energy in the fuel is rejected as heat in the exhaust and coolant. The remainder is transformed into mechanical energy or work. Some of the work is used to overcome frictional losses in the transmission and other parts of the drive train and to operate the vehicle accessories (alternator, coolant pump, fuel pump etc.). As a result only about 20 to 25% of the original energy contained in the fuel is actually used to propel the vehicle. This propulsion energy overcomes

- The inertia when accelerating or climbing hills,
- The aerodynamic drag
- The rolling resistance of the tires on the road. Consequently there are two general ways to reduce vehicle fuel consumption:
- Increase the overall efficiency of the power train (engine, transmission, final drive) in
- order to deliver more work from the fuel consumed and
- Reduce the required work (weight, aerodynamics, rolling resistance and accessory load)
- to propel the vehicle.

Waste heat from the exhaust gas from the vehicle accounts for a considerable portion of the fuel energy that is not utilized, about 40%. Therefore a means to improve the fuel economy is to increase the overall efficiency of the power train by recovering waste heat from the exhaust gas of the vehicle. According to"1999 Bosch Automotive electrics and electronics Handbook" the average electrical power consumption of an automobile is about 600 watts. This load is carried by an inefficient engine/alternator system. The objective is to reduce the load on the alternator and consequently on the engine by converting the waste heat from the exhaust gas of the vehicle into electrical energy. Clarkson University has formed a team to design, build, test and simulate a prototype automotive exhaust thermoelectric generator (AETEG) that offsets the engine shaft power by converting the waste heat into electrical energy. The AETEG works on the principle of thermoelectricity: when the junctions formed by joining two dissimilar current carrying conductors are maintained at different temperatures, an electro motive force (emf) is generated in the circuit. The current carrying conductors are known as thermoelectric elements and the couple formed out of the two current carrying conductors is known as thermoelectric couple. In a typical generator heat exchangers are used to transfer heat from the heat source and the sink to junctions of the thermocouple. The heat exchangers and the thermoelectric couple unit is known as a thermoelectric generator (TEG). The AETEG has the vehicle exhaust gas as its heat source and the engine coolant as its heat sink. Thermoelectric conversion is a solidstate technology with no moving parts, which is simple and reliable.

From the above discussion the complete AETEG system can be categorized into (1) Exhaustsystem (2) Coolant system, and (3) TEG system. The definition and Significance of each of these subsystems are discussed in later chapters.

III.METHODOLOGY

3.1.Schematic layout

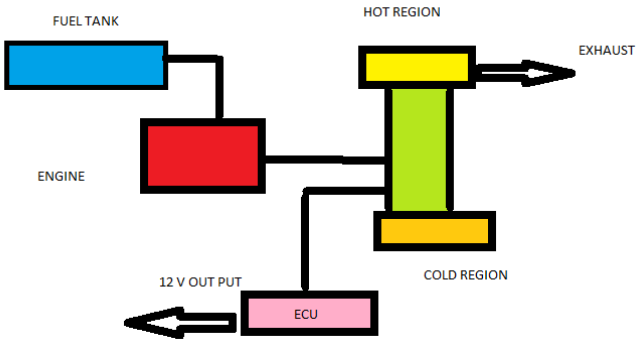

Fig.1 Layout of Thermoelectric Generator with Vehicle Setup

1.Thermoelectric generator
2.Heat source &heatsink
3.Microcontroller
4.Amplifier
5.Battery

3.2.Working Principle

The project comprises of a two wheeler, thermo electric generator, power electronic convertor and a battery to store the generated power.

When the temperature difference is maintained between two sides of the thermoelectric couple (T1 and T2), thermal energy will move through the device with this heat and an electrical voltage, called the Seebeck voltage, will be created. If a resistive load is connected across the thermoelectric couple's output terminals, electrical current will flow in the load and a voltage (V) will be generated at the load. Practical thermoelectric modules are constructed with several thermoelectric couples connected electrically in series and thermally in parallel. The vehicle is started and the acceleration is to be given, so that the amount of the heat leaving the exhaust will be increased. Due to this heat, the surface of the exhaust pipe and the silencer is heated to high temperature.

The hot surfaces will try to liberate the heat to the atmosphere, which acts as heat sink. Since the atmosphere temperature is less than that of the silencer surface, a temperature difference is created and hence the surface tries to attain the equilibrium state through the heat transformation process. But this will take much longer time. Hence, in order to increase the rate of heat transfer the thermal grease is used.

The thermal grease is coated on hot surface of the silencer and also in the inner surface of the fins. The fins are also used to increase the heat transfer rate. As the vehicle moves, the air flow will take place between the fins and it acts as the sink.

As the surface of the silencer gets higher heat, the heat transfer rate will increase due to the increase in the temperature difference. The peltier module is placed between the heat source (Hot silencer surface) and the heat sink (atmosphere) and the fins are placed above the module. The module is made of semiconducting materials.Hence by the principle of seebeck effect, the temperature difference can be directly converted into voltage by using some thermoelectric materials.

Based on this effect, when the surface heat of the silencer is emitted to the atmosphere, the electrons and holes of the thermoelectric semiconductors will try to move towards the junction and makes the flow of electric current to be possibly.

IV.Design of power generation through exhaust gas using TEG

The design of the project is done using AUTOCAD.

Designing is the process of converting an idea into an object, product or a system. This process is iterative. CAD(Computer Aided Design) is a tool that can be used for design and drafting activities. Since it uses the computing power of a processor, CAD drawings are faster, better and more accurate than their manually drafted counterparts.

Fig.2 Full setup in bike

AutoCAD is sophisticated CAD software that is synonymous with engineering drafting. The concept of AutoCAD evolved way back in the 1980's, when engineers and architects were seeking to harness the power of newly introduced personal computers

to reduce the drafting time. People began experimenting with internal graphic controllers which allowed them to draw engineering / architectural drawings at the front end which were efficiently replicated at the back end of the computer. AutoCAD was formally launched in December 1982 by Autodesk, a leader in 3D design, engineering and entertainment software. Simply put, AutoCAD enables engineers, designers and architects to produce 2D and 3D models using computers.

AutoCAD started as a design tool for engineers and architects, but is now used by other professionals as well. Autodesk, the company behind AutoCAD, has developed custom versions that can be used by design engineers, civil engineers, electrical and electronics engineers and mechanical engineers. AutoCAD thus covers a vast canvas - from engineering to industrial sector, there is an AutoCAD package for everyone. In that sense, AutoCAD is a horizontal product. It is used by product development teams, manufacturing facilities, media and entertainment industries, engineers, architects; educators and students; entrepreneurs, non-profits, medical professionals, and including beginners. AutoCAD is thus useful for any domain that requires 2D and 3D designs.

V.Microcontroller

The fig represents **microcontroller** (**MCU** for *microcontroller unit*) is a small computer on a single metal-oxidesemiconductor (MOS) integrated circuit(IC) chip. In modern terminology, it is similar to, but less sophisticated than, a system on a chip (SoC); a SoC may include a microcontroller as one of its components. A microcontroller contains one or more CPUs(processorcores) along with memory and programmable input/output peripherals

VI.Prototype

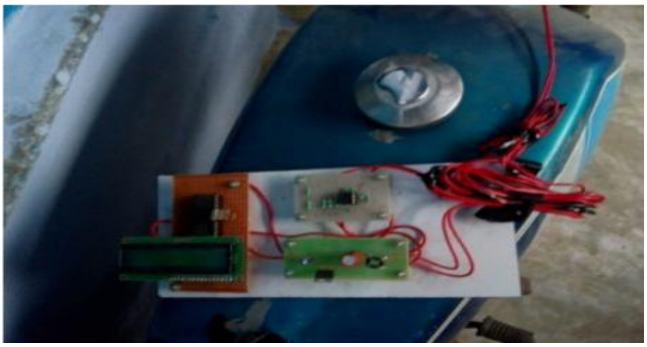

Fig.4 Circuit setup

We have designed a prototype based on this concept using a Thermoelectric generator (TEG), (PEC) microcontroller, heat sink and power window setup with the power supply of 12V battery source. This project works on the principle osseebeck effect.

VII.Experimental results &testing method

The testing has been done by using infrared thermometer. An infrared thermometer is a thermometer which infers temperature from a portion of the thermal radiation sometimes called black-body radiation emitted by the object being measured. They are sometimes called laser thermometers as a laser is used to help aim the thermometer, or non-contact thermometers

The designed system is made to run at different Speeds and the results are as follows:

TABLE 1

Readings taken From the Project Using Infrared Thermometer

EXHAUST TEMPERATURE	HEAT SINK TEMPERATURE	AMPLIFIED VOLTAGE
54.9	31.4	1.3
87.5	35.8	2.2
89.3	36.1	4.2
93.5	36.9	6.7
104.1	37.2	8.2
118.4	39.9	10.3
124.2	40.1	11.2
129.1	41.2	13.5
133.2	42	15.4

VIII.Conclusion

This project aims to find a possible way to recover the waste heat from the exhaust of I.C. engine as well as to design and fabricate one such system to serve the aim. Experimentally it is found that when two thermoelectric generators are connected in series. This generated power either directly used to run some auxiliary devices of an automobile or may be stored in the battery and used later. The engine performance is unaffected by the designed system because heat extracted from the surface of the bend-pipe of the exhaust manifold which does not affected the working of engine. If higher temperature range is required then TEG module must be changed to higher temperature range (200˚C). Thus, the above stated system may be successfully implemented in different automobile engines, with slight changes

IX.References

1. P.Mohamedshameer,D.Christopher "Design of exhaust heat recovery power generation system using thermo-electric generator" ,1
2. Aliakbarakbarzadeh, "Prospects of waste heat recovery",2
3. Hardik k. Jani1ketan D , "Panchal ,effective utilization of thermo-electric generator for waste heat recovery" ,3
4. NyomansugiarthaandPutuSastranegara, "The potential of thermoelectric generator for engine exhaust heat recovery applications" ,4
5. (PDF) Thermoelectric Power Generation using Waste-Heat Energy from Internal Combustion Engine.html
6. (PDF) Thermoelectric Power Generation using Waste-Heat Energy from Internal Combustion Engine.html
7. Thermoelectric generator - Wikipedia.html
8. Thermoelectric Power Generators or Seebeck Power Generation Electrical4U.html
9. Jorge MARTINS,Francisco P.BRITO,L.M.GONCALVES,Joaquim ANTUNES from Universidade do Minho,Portugal Thermoelectric Exhaust Energy Recovery with Temperature Control through Heat Pipes by forSAE International.
10. J.S.Jdhao, D.G.Thombare, Review on Exhaust Gas Heat Recovery for I.C. Engine International Journal of Engineering and Innovative Technology(IJEIT).
11. T Stephen John. (2014) high Efficiency Seeback Device for Power System Design and Efficiency Calculation: A Review of Potential Household Application.(IJCA)(0973-8887 |Vol. 97|No.18|July 2015.
12. R.Saidur,M.Rezaei,W.K.Muzammil, M.H.Hassan, S.Paria, M.Hasanuzzaman (2012) Technologies to recover exhaust heat from internal combustion enginesRenewable and sustainable energy reviews(Elsevier)16 (2012) 5449-5659.
13. Adhithya k, Rajeshwar Anand, Balaji G.,Harinarayana J. (2015), Battery Charging Using Thermoelectric Generation Module In Automobiles.(IJRET) E-ISSN 2319-1163.
14. Rohan Mathai Chandi and Rakesh Rajeev, Design and Analysis of Heat Exchanger for Automotive Exhaust based Thermoelectric Generator [TEG], International Journal for Innovative Research in Science & Technology| Volume 1 | Issue 11 | April 2015.