Smart Pesticides Using Robotics and IoT

[1]Dr.A.Bamini, [2]Miss.M.Shanmugadevi

[1]M.Phil, Ph.D., [2]MCA
[1]Head, [2]Student
Department of Computer Applications
The Standard Fireworks Rajaratnam College for Women, Sivakasi, India.

***Abstract*: Agriculture is a very integral part of today's life. Agriculture is one of the latest Trade that use robotic technologies. The primary goal of this paper is to demonstrate the use of Technology for the betterment of agricultural yield. Technologies such as IOT, Machine learning and Robotics can be used in a very productive way to increase the agricultural yield and to reduce losses. This Paper Entitled "Smart Pesticides Using Robotics and IOT" is developed using Arduino IDE1.8.7. The main aim of this paper is to eradicate pests and lists the different types of crops that will be grown in the land. Pests refer to any agent insects, microbes, plants, animals and abiotic factors that cause damage to the cultivated crops. They are generally a nuisance, diseases and detrimental to crops, damaging property or make lives difficult to humans. Agriculture is a very vast field but this paper mainly focuses on the pest management. Pests are a major problem to agriculture since the beginning of time. They cause a humongous amount of loss in terms of money, time and effort. Hence Pest Management is very essential. The pests has been removed by using Robotics, which is connected via Bluetooth Mobile Connection. Cultivation of crops for optimum yield and quality produce is highly methodical it can be improved by the aid of technological support. The target of the paper is to eliminate pests in the land, and check the Soil Fertility using Soil Check sensor, it also helps to promote the type of crops that will be grown on the land.**

***Keywords*: Iot, Sensor, Cultivation.**

I. Introduction

Agriculture is a very integral part of today's life. The aim of agriculture is to change the surface of earth by cultivation of crops and raising of livestock for food and economic gain. It is the backbone of the economic system of a country. To applying pesticides to control pests with or without having the knowledge of the quantity of pesticides to be applied. The traditional techniques have drawback such as applying the pesticides, lack of information about the kind of crops that needed to be grown for the particular type of soil. These drawbacks provide low quantity yield and a burden to manage the agricultural fields. To overcome these issues the paper titled **"Smart Pesticides Using Robotics And IOT"** has been introduced**.** It gives the solution to increase the productivity of the crops using the robotics and it can be remotely viewed/controlled over smart phones using Internet of Things (IOT).The system detect the Pests in the agriculture land using the robotics. The pH sensor is used to find the acid and base of the soil. The soil check sensor is used to find the fertility of the soil to identify the crops that can be grown in the land. It used to enrich the growth and production of Agriculture field.

II. Literature Review

Research is growing in all domains. In the current scenario agriculture plays a vital role in earth. Many researchers have focused to provide an optimized solution for Pest management and smart Pesticides. A model proposed by **[1] VaishnaviJeurkar** in "IOT based Pest Management System" used to detect the pests in the agriculture land. The performance of capacitance is measured using RC Methods to provide the output. Another model proposed by **[2] Kajol R &AkshayKashyap** in "Automated Agriculture Field Analysis and Monitoring System Using IOT" suggested the farmers about the Soil Fertility level, detecting pests and type of crop suited for soil.

III. Proposed Work

This paper mainly focuses on the eradication of pests from the agricultural land. Most of the farmers do not have awareness of the modern world and they focus on the traditional norms. The development in science and technology had initiated a lot throughout the globe. To overcome the old traditions and the methodology from the literature survey, there is a need for the farmers to be uplifted in the society. The contribution of this study is eradication of pests is a necessary technique and identifying the fertility of the soil for growing the suitable crops in the land for the farmer's welfare. The system is proposed to overcome the issues of eliminate pests. It focuses on controlling and exterminating the pests with the help of a robot. The acid and base level of soil detected. Finally, the fertility of the soil is checked. Using this fertility, the farmers are trained to have awareness about what crops can be cultivated and grown in the particular land. Hence the proposed system would improve more yields that may aid in better quality crop production**.**

IV. Methodology

❖ Pests Removal

This paper present the opportunities that new technological development related to agriculture (eg. robotics) can offer to agriculture in developing country. This robotics technologies are mainly targeted to remove the pests that affect the plants in agriculture land. Farmers are currently spraying pesticides around their fields by manpower. It have been developed for reduce the manpower. This Robotics technology is used to many of insect pests can be detected and monitored automatically.

Robot:

The robot plays the vital role within the paper. It contains the pesticides to eliminate the pests in the land. When it identifies the pests starts sprinkling within the land through Bluetooth module.

Bluetooth Device:

It's a module connected between the IoT device and robot. The robot is controlled by this module.

Arduino UNO Board:

The open source Arduino Software makes it easy to write code and upload it to the board that is Arduino UNO board. It is a microcontroller board that consists of 6 analog pins and 14 digital pins.

.

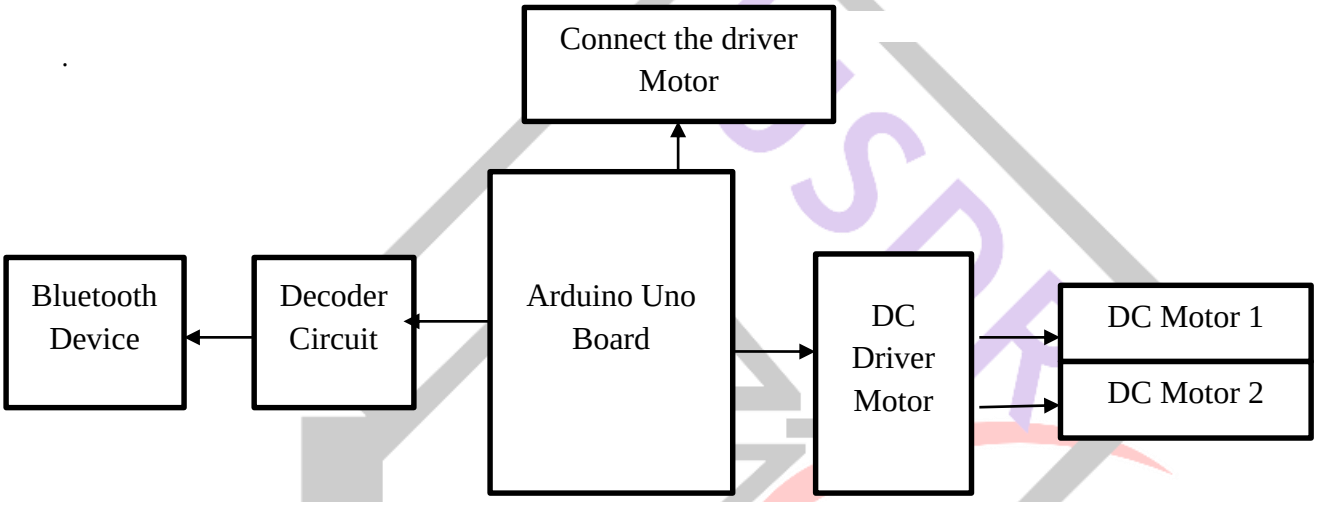

❖ Soil pH Level

The soil nutrients its helps to improve for the better plant growth and soil fertilization. Its helps to improve the agriculture field. The soil testing is to determine the amount of nutrients present in soil. The pH is also one of the most important and informative soil parameter to detect the soil fertility. The pH sensor is detect the Acid level and base level of the soil, its used to find the crop should be grown in the particular soil. This system is proposed to help the farmers to increase the production through the mobile application. This paper is used to find the soil pH value by using the pH sensor.

❖ Soil Fertility

This paper check the soil fertility. It will also allow determine time requirements and can be used to diagnose problem areas. Sampling technique is used to analyze results. Soil testing is also a required for farms that must complete a nutrient management plan. In system is to determine suitable crops for current state of soil. by calculating nutrient content in soil. This paper is used to find the soil pH value by using the soil check sensor. The soil check sensor is used to detect fertility of the soil, its used to find the crop should be grown in the particular soil. The output is display the Arduino Serial Monitor. The main aim of this paper is, if check the soil fertility and find what kind of crops should be grown in the agriculture land.

❖ Sensor Nodes

This module mainly focuses three sensors. These sensors are placed in the soil which communicates with Arduino Boards by the use of effective communication. These system was developed using microcontroller. They are listed below:

- pH Sensor
- Analog Sensor
- Soil Check Sensor

The pH Sensor will intimate the acid and base value of the soil and contributes the standard of the soil with high accuracy and good stability. The Analog pins are employed to spot what crop could be grown in the land to enhance yield. The Soil Check Sensor is used to find the fertility of the soil and gives a report about the crop that can be grown in the land.

❖ **IOT Module**

This system is proposed for Pests management. Its pesticides the Pests in the agriculture land using Robotics. This system is monitored by Smart Phone.The pH Sensor is used to find the Acid and Base level of the Soil. The Soil Check Sensor is used to check the Soil Fertility. These sensors are helps to find the different type of Crops will be grown in the land.

V. Process Flow

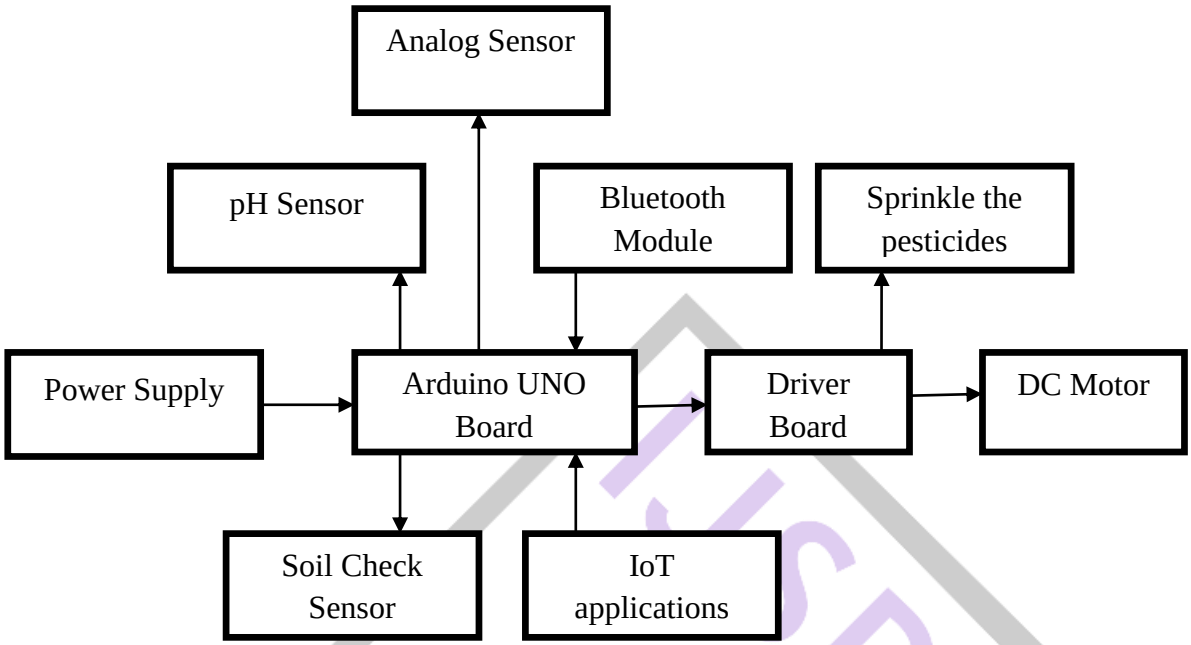

VI. Work Flow

It represent the pH level in the soil in both acid and base condition

Input Data (in moisture)	Output Data (in real time)
1024	Acid Level
260	Base Level

VII. Conclusion

The implementation of this system ensures to remove the pests in the field of agriculture. It provides the pests free land and find the quality of the soil to promote the suitable crops to be grown. It provides an efficient and smarter way of monitoring the fields for farmers. It reduces the damages in the Crops. It helps to increases the productivity of fields. Farmers can monitor their agricultural field at anytime and anywhere in the world. In future the agricultural land would be a great boon for the farmers.

References:

[1]Kaushik Gupta (2018), "Smart Pests Management in Housing Societies using IoT", Inventive Communication and Computational Technologies (ICICCT) .

[2]Maneesha V. Ramesh; K. V. Nibi; AnupamaKurup; Renjith Mohan; A. Aiswarya; A. Arsha; P. R. Sarang, (2017) “Soil quality and Pest Management using IoT”.

[3]S. Ullas, H. N. Vishwas,(2019) "Pest Management and Fertility of Soil using Internet of Things", Smart Systems and Inventive Technology (ICSSIT)

[4]Nallapaneni Manoj Kumar, Archana Dash, Neeraj Kumar Singh, "Internet of Things (IoT): Soil pH level Using IoT ",(2018), Power Energy Environment and Intelligent Control (PEEIC)

[5]VarshaRadhakrishnan, Wenyan Wu,(2018), "IoT Technology for Smart Pests Management ", HighPerformance Computing and Communications; IEEE 16th International Conference on Smart City; IEEE 4th International Conference on Data Science and Systems (HPCC/SmartCity/DSS)