CFD ANALYSIS OF NATURAL CONVECTION IN CIRCULAR AND SQUARE CAVITY INSIDE SQUARE ENCLOSURE

[1]PUSPARAJ SINGH, [2]ARVIND SINGH RAJPUT

[1]ASSISTANT PROFESSOR, [2]M.TECH. REASEARCHER
RIT, REWA (MP.)

***Abstract*: In this research work natural convection in two dimensional enclosure is studied numerically for differently heated air filled square enclosure with Inner Square and circular cavity. The inner circular and square wall kept at high temperature while the outer square wall maintain at low temperature. The natural convection is obtained by using the finite volume method in enclosed square enclosure for different Rayleigh numbers varying over the range of 10^4 –10^6.**

In order to study the flow field and temperature distribution these investigation further extended by changing the location of square and circular inner cavity in vertical position. The result obtained by CFD analysis it shows that the nussalt number and size of eddies of flow field strongly depended on Rayleigh no and position of At low Rayleigh No 10^4 the bicellular vortices to an uni-cellular vortex occurs when an inner cavity is placed at a maximum distance from the center of the enclosure.in case of higher Rayleigh No. Uni cellu vortex id formed in inner space of cavity. The average Nussalt No of the enclosure show minor deviation for each Rayleigh number but its better in case of circular inner cavity.

The Pressure-Velocity Coupling Method used with Non-Iterative Time Advancement (NITA) scheme used to solve the problem. The distribution of temperature and stream function are taken as a function of thermal and geometrical output parameter for given problem. Two stage investigations have been performed to find out the variation in the result between different approaches.

***Keywords*: CFD, HEAT TRANSFER, NATURAL CONVECTION, DIMENSIONLESS NUMBER, HEAT TRANSFER COEFFICIENT.**

1. INTRODUCTION

The natural convection flow and heat transfer in square enclosures are extensively Studied due to its diverse applications. In the vertical position enclosures can acts as insulation for doors and windows of buildings, air conditioning compartment of trains, industrial furnaces, chimney and many heat transfer equipments and in an inclined position it is used in skylights, roof windows, solar collector storage and many other solar applications. The present study is concern with natural convection heat transfer in vertical enclosures with centrally holes and square slot. The vertical enclosures consist of centrally circular hole and square slot inside the cavity and separate by cold wall with small gap which is filled by air and it being a transparent medium allows light to pass through it.

Convection

Convection is transfer mode is comprised of two mechanisms. In addition to energy transfer by random molecular motion (diffusion), energy is also transferred by the bulk of macroscopic motion of fluid.

Types of Convective HeatTransfer

Natural Convection

When a surface is maintained in still fluid at temperature difference higher or lower than the fluid a layer of fluid is heated or cooled by the effect of surface temperature. A density difference is created between layers and still fluid that surrounds it. The density difference gives buoyant force which causes flow of fluid near the surface heat transfer is such conditions is known as Natural Convection or free convection. No external means required to flow here.

Forced Convection

When a fluid is forced to flow along the surface by external means such as fan, pumps or by stirring which artificially induced convection current which causes flow. It is known as forced convection.

2. LITERATUREREVIEW

"A numerical study of natural convection in a square enclosure with a circular cylinder at different vertical locations". Kim at al, 2008[2]: Numerical calculations are carried out for natural convection induced by a temperature difference between a cold outer square enclosure and a hot inner circular cylinder. A two-dimensional solution for unsteady natural convection is obtained, using the immersed boundary method (IBM) to model an inner circular cylinder based on the finite volume method for different Rayleigh numbers varying over the range of 103–106. The study goes further to investigate the effect of the inner cylinder location on the heat transfer and fluid flow. The location of the inner circular cylinder is changed

vertically along the center-line of square enclosure. The number, size and formation of the cell strongly depend on the Rayleigh number and the position of the inner circular cylinder. The changes in heat transfer quantities have also been presented.

"Transition From Single-To Multi-Cells Natural Convection Of Air In Cavities With An Aspect Ratio Of 20."Michel Pons, 2008 [3]: Transition from mono-cellular to multi- cellular flow in differentially heated cavities with an aspect ratio of 20 is studied. The numerical model is based on the Boussinesq equations, modified for applied work of pressure forces. The Nusselt number is increased while convection is reduced, and all transitions are delayed and a thermodynamic analysis of transition is developed. The analysis shows that, after transition, the multi-cellular flow topology tends to decrease altogether viscous friction and work of buoyancy forces due to existence of a threshold.

"Experimental and Computational Fluid Dynamics Investigation of an ICSSWH at Various Inclinations." D. Henderson et al, **2007 [4]** The experimental tests of the Integrated Collector Storage (ICS) heater have been conducted for controlled heat flux up to 400 W. The thermal performance of the heater is recorded experimentally at angles $0–60^0$ from horizontal, in 150 intervals. CFD analysis is also carried out for the same.

"Low Turbulence Natural Convection in an Air Filled Square Cavity", Y.S. Tian et al,[5] In this work experimental study of low level turbulence natural convection in an air filled vertical square cavity was conducted. The dimensions of cavity were 0.75 m × 0.75 m ×1.5 m for 2-D flow. The hot and cold walls of the cavity were isothermal at 50^0C and 10^0 C, respectively, giving a Rayleigh number of 1.58 x 10^9. The temperature and velocity distribution was systematically measured at various locations in the cavity, and was nearly anti-symmetrical.

3. PROBLEM IDENTIFICATION

The present study deals with two-dimensional natural convection taking place inside centrally circular hole inside the enclosed Space. The enclosed cavity has differentially heated inside walls and cold outside wall. In this problem the cavity is filled with air and the effect of conduction and radiation is neglected. The space between the enclosures is filled with air since air being transparent allows light rays to pass through it and also acts as insulator.

In the above Fig 3.1, H is the height and length of the cavity along which the heat transfer takes place. Inside Circle and square is the hot-wall temperature and outside wall is in low.

Assumptions

The following assumptions are made in the present work:

1. Flow is steady laminar natural convection.
2. Flow is two -dimensional.
3. The fluid properties are constant except that the variation of density with temperature is accounted for in the formulation of buoyancy term (Boussinesq approximation).
4. The effect of conduction and radiation effects are neglected.

4. METHODOLOGY

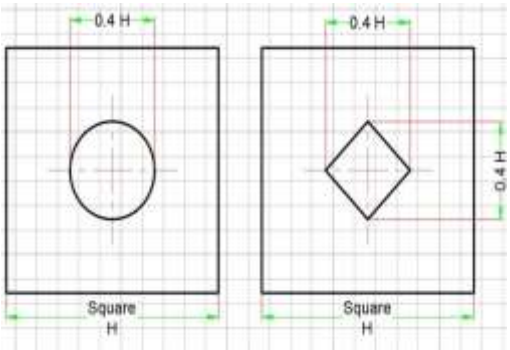

Fig. Schematic representation of square cavity

Geometric Creation

The geometry of the enclosed space, meshing and boundary identification is carried out in Ansys software. The dimensions of the cavity are permit to cover wide range of Rayleigh number from 10^4 to 10^6.

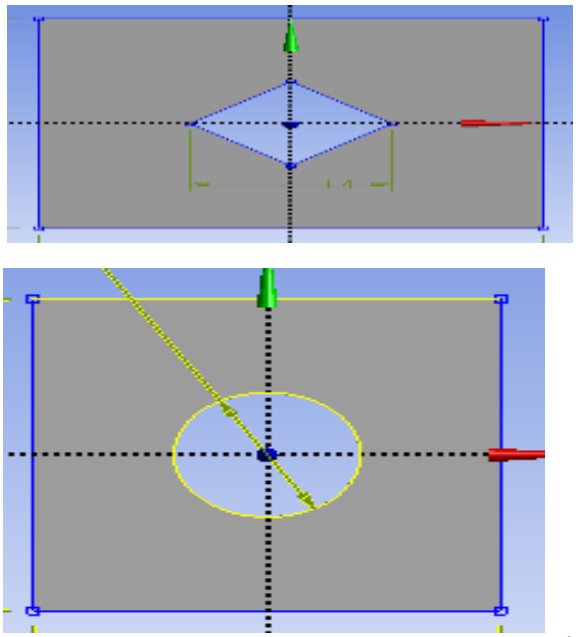

Fig. Geometry of Square enclosed space for Ra=10^4

The creation of geometry in ansys software is based on hierarchical order. It means that first Coordinates of the geometry are created and then line and curves are drawn through the draw tools and finally face is created bounded by those curves. The face forms the computational domain. Similarly the geometry of other orientation and Rayleigh no has been created in the same way.

Mesh Generation

After creating the geometry it is required to divide the control volume into smaller number of Nodes and element of finite size, therefore it is called finite volume method. The method of splitting the Control volume into small finite size volume is known as meshing of the control volume. As Geometry is simple structured grid is preferred as it gives better results as compared to unstructured grid. Here we were using the minimum size of node 1e-04 m for mesh generation of square cavity.

Solution method

In order to solve the given boundary condition in ansys fluent workbench we were using the Pressure-Velocity Coupling Method. ANSYS Fluent provides four segregated types of algorithms: SIMPLE, SIMPLEC, PISO, and (for time-dependant flows using the Non- Iterative Time Advancement option (NITA) Fractional Step (FSM). These schemes are referred to as the pressure-based segregated algorithm. Steady-state calculations will generally use SIMPLE or SIMPLEC, while PISO is recommended for transient calculations. PISO may also be useful for steady-state and transient calculations on highly skewed meshes. In ANSYS Fluent, using the Coupled algorithm enables full pressure-velocity coupling, hence it is referred to as the pressure-based coupled algorithm.

5. RESULT & DISCUSSION

Validation of Present Results

In order to validate the result of natural convection problem in square enclosure with square and circular cavity a benchmark result of hojat and seyed [1] and Kim et al.is used for comparison of average wall surface nussalt number. The comparison is carried out by using dimensionless parameter: Pr = 0.7, Ra = 10^4 to 10^6 and $\delta = 0$. The temperature difference between side walls was kept at constant for all the cases. The property of air is obtained at mean temperature of hot wall and cold wall. At Rayleigh No. 10^6 when the circle moves downward more spaces between the hot inner circle and the top cold wall of the enclosure are secured, generating the buoyancy induced convection. Thus isotherms move upward and larger eddies exist on the top of the inner cylinder, which increase the thermal gradient on the top of the enclosure. The dominant flow is formed at the upper half of the enclosure, locating the core of the recirculation eddies in the upper half. The stagnant region under the inner cylinder decreases as δ becomes more negative, except for the two bottom corners of the enclosure.

6. CONCLUSION

In this research work a free convection heat transfer in a heated cylinder with two different geometry with different position in an air filled square enclosure investigated by using CFD analysis. A CFD study was performed and the effects of the Rayleigh number and the position of the heated cylinder on the fluid flow and heat transfer were investigated. The results show that for both cylinders, at low Rayleigh numbers of 10^4 and 10^5, the bicellular vortices to an uni-cellular vortex occurs when an inner cylinder is placed at maximum distance from the center.

The two different validation has been performed to analysed the nature of natural convection of heat transfer in square enclosure with circular and square cavity. The phase I we compare the Fluent result with the Numerical results of Hojat and Seyed Ali [1] and Kim at al. [2],

In second phase we compare the fluent result obtained by different Rayleigh number with different position on cavity along the vertical axis and it also show good relationship between both curves . So finally we concluded that the result obtained by the Computational fluid dynamic analysis of square enclosure for different Rayleigh No. is close to the numerical result. In order to analyze the behavior of stream function and temperature contour a comparison study is also perform between the numerical and CFd result of present work.

At Ra = 10^6, only a single cellular vortex is formed in the enclosure with respect to the position of the inner cylinder. At these high Rayleigh numbers, the effect of the inner cylinder position on fluid flow and heat transfer is significant, especially in the upper half region. For circular cylinder, when Ra=10^6, the secondary vortices due to the rising thermal plume from the inner cylinder are present on the upper surface of the inner cylinder.

7. FUTURE SCOPE

- The present work is concerned with two-dimensional flow inside square enclosed space. The work can be further extended for three-dimensional Flow.
- In the present work air is used as working fluid. The work can be extended for different fluid.
- The present work is concerned with laminar natural convection flow. The work can be further extended for Turbulent Flow.
- In the present work the dependency of Rayleigh number is taken into consideration. The work can be further extended for varying Prandtl number and inclinations of plate.
- In the present work the natural convection flow inside enclosed space is considered and the effect of radiation and conduction are neglected.
- The present work is concerned with circular and square cavity inside the square enclosure that can also extended in terms of triangle and elliptical or rhombus geometry.
- In this work cavity move along the vertical axis that can also extended by using movement along the horizontal axis.

REFERENCES

[1] Hojat et al "Comparison of Natural Convection around a Circular Cylinder with a Square Cylinder Inside a Square Enclosure" Journal of Mechanical Engineering and Automation, 2012, 2(6): 176-183.

[2] Kim & Lee "A numerical study of natural convection in a square enclosure with a circular cylinder at different vertical locations" International Journal of Heat and Mass Transfer 51 (2008) 1888–1906

[3] Chang B.H. "Numerical Study of Flow and Heat Transfer in differentially heated enclosures" International journal of Thermal Science, 18, 451-463,2014.

[4] Corcione, M., "Effects of the Thermal Boundary Conditions at the Sidewalls upon Natural Convection in Rectangular Enclosures Heated from Below and Cooled from Above", *International Journal of Thermal Sciences, 42,* 199-208, 2003.

[5] Elsherbiny S.M., Raithby G.D., Hollands K.G.T., "Heat transfer by natural convection across vertical and inclined air layers", Journal of heat transfer, 1982, 104, 96-102.

[6] Emery A.P., MacGregor R. K., "Free Convection through vertical plane layer: oderate and high Prandtl number fluids," Journal of Heat Transfer, 91, 391,1969.

[7] F.P Incropera, D.P. Dewitt, Fundamental of heat and mass transfer. Fifth edition. Wiley India.

[8] Fomichev, A., D.C. Curcija, B. Balagurunathan, and M. Stocki. . Investigation of heat transfer effects of sloped and ventilated internal cavities of framing systems, Final report.Amherst: Center for Energy Efficiency and Renewable Energy, University of Massachusetts,2007.

[9] Fusegi, T., Hyun, J. M., and Kuwahara, K., "Natural Convection in a Differentially Heated Square Cavity with Internal Heat Generation," Numerical Heat Transfer,1992, 21, 215–229.

[10] G. De Vahl Davis, " Natural convection of air in a square cavity: A bench mark numerical solution" International Journal for Numerical Methods in Fluids,3, 249– 264,1983.