Ring Analysis and FEM Modelling For Manufactured Composite for the Piston Ring Material and Post-Performance-Based Validation

Ashok Kumar Bishnoi[1], Naveen Ghanghas[2]

M. Tech. Scholar[1], Assistant Professor[2]
CBS Group of Institutions, Jhajjar (Haryana)
Maharishi Dayanand University, Rohtak

***Abstract*: The research reported in paper includes two separate hybrid experiments: grene / graphite and fleash / graphite, 4 similar checks. Two independent Research Analysis of findings based on experimental and FEM models. Creation of engineered composite for piston ring material and performance-based testing. This study focuses on 7075 hybrid alloy composites in this modeling and experimental inquiry. The wear tests detected under SEM observation demonstrate oxide layer development, i.e. mechanical, iron- and aluminum-oxide mixed coating, which leads to the composite material's enhanced wear resistance. Sliding wear pattern and SEM tests splits are also well known. The Taguchi approach is used to refine experimental wear parameters. And the main parameters were load, followed by reinforcement and sliding speed. The required temperature and moving size parameters. FEM ring research indicates validity of the proposed piston ring material. And the stresses created in the piston configuration were found to be below normal limits. Based on various critical parameters for a material to be used as piston rind in comparative study, the contrast of conventionally used material and the composite created is seen. Another method of composite making as pow we can use metallurgy instead of stir-casting.**

***Keywords*: Grene, Fleash, FEM models, SEM tests, FEM ring, spinning motion**

I. Introduction

A rive ring of the column falls into a raft in a corresponding device, for example an internal combustion device or a steam engine, on the outside of a column. In a tri-bological context, there are two very different views which especially question dynamic seals. First, a dynamic screen promotes lubricant and tri-bological smoothness and thus avoids wear due to pollutant-generated 3-body abrasion. In parallel, the screen suppresses the lubricant leak of the tri-bosystem, an improved protection and cleanliness issue. The sticking position, sliding path, pace, or lubricating appears not to shift in a closed touch creating a screen of spinning motion [7], but is particularly difficult to accomplish by sealing linear motion.

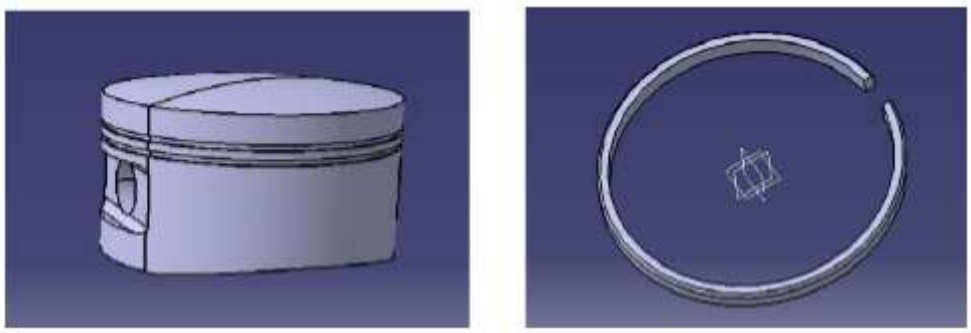

Fig. 1 Simulative diagram of Piston and Piston ring

This must satisfy all specifications of a complex linear motion seal that works in challenging thermal and chemical environments for modern internal combustion engines. In short, the following conditions can be defined for piston rings:

- Low pressure, for high performance help
- Small ring wear, to guarantee a good working existence
- Low wear for preservation of the optimal liner surface texture ·
- Prevention of pollution by reducing engine flow of oil into the combustion chamber
- Great capacity to seal and low power use aid
- High resistance for technical loss, chemical assaults and hot erosion
- Efficient infrastructure and long-term economic growth

Fig. 2 Components of Piston Ring

1.1 Piston sphere procedure

Two most relevant parameters in the ring box are the ring mechanic, radial and axial rotation and ring torque.

Annular and ring bending across the middle of the ring impact the function of the band, the shape of the oil film and the tension between the band and the lining, stretches and blows through the ring bag.

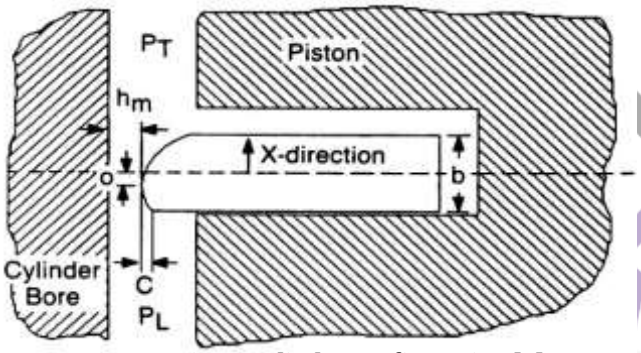

Fig. 3 Cylinder configuration [2]

The piston circles have their main movement equivalent to the corresponding piston movement. Study of piston ring lubrication, the velocity of the piston ring can be calculated by the hammer angle. The structure of the crank is evident in the chart. Mass and Klier[8] should approximate the reciprocal pace of the piston motion with a reasonable precision.

In case of VP, instantaneous velocities of the piston, A is immediate piston acceleration, R is padding of the circle, and A is angular speed of the piston;

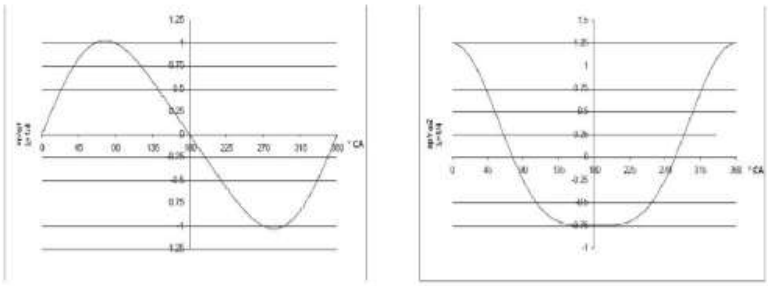

(a), (b)

Fig. 4 (a) (b) wave form of variation

The piston often has a secondary motion, which other researchers are investigating with the primary base movement above. The piston ring's tribological behavior in the secondary piston movement is the pronounced cause. Even the secondary movement, that is the pistons around the pole, must be identified and recognized.

II. Simulation Analysis

The examine pressure inside the piston ring under various stress situations, such as gas pressure, friction between piston ring and nozzle, and centrifugal forces. During these three charging conditions the resultant tension and deformation is studied. The built prototype has the same properties that C3 developed for the testing of concept related materials.

The method intended to find solutions to a range of development concerns. Though developed and extended initially to include a broad range of continuous mechanics. It has attracted substantial interest in the Faculties of Technology and Industry, due to its simplicity and ease of usage as a study tool. In a condition that is increasing in engineering today, qualitative approaches will be sought rather than specific solutions. The resourcefulness of the analyst is typically spared and proposes different solutions to overcome this dilemma. Another approach is to minimize where complexity is overlooked and the issue is simplified to one that functions from time to time which more commonly contributes to inconsistent or wrong sequence reactions.

For machines now ubiquitous, the task becomes more difficult to manage to find a answer to the estimated Fig . The finite element model of a problem offers partial reconstructions of the equations controlling it. The basic principle of the approach to finite elements is to create or approximate a solution area by replacing it analytically with a set of extracted components, which can be mixed in a variety of ways.

2.1 Generation of Mess

Examination of finite elements is a powerful method helping you to check the behavior of each structural component. Although the findings are unpredictable, the odds of loss are estimated more reliably. Hence it is mainly used in most scientific analyzes. After the measurements are calculated the configuration of the 3D piston ring is modeled as seen in the Fig in the ANSYS.

A piston circuit model with appropriate measurements was established in ANSYS, as seen in Table 1. To verify the materials dependent on the specification, the constructed form has the same properties as the constructed compound "C3."

Table 1 Magnitudes model

	Outer dia(mm)	Internal dia(mm)	Thickness(mm)	Gap(mm)
Dimensions of ring	53	49	3	5

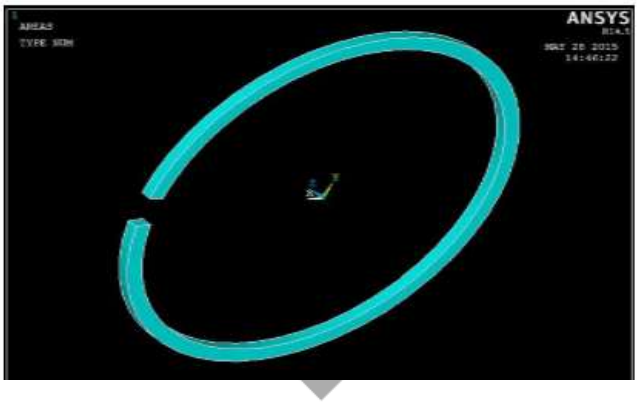

Fig.5 Piston ring

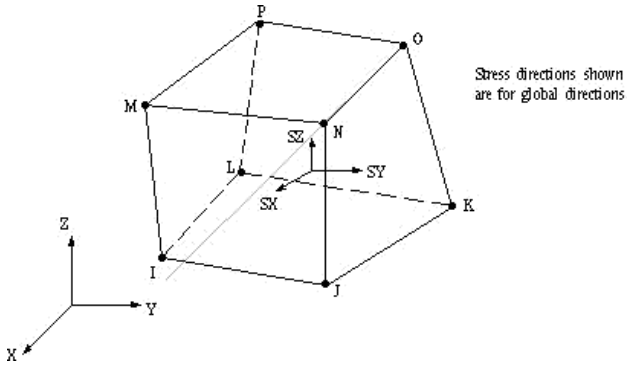

Fig. 6: 3-D shape

2.2 Meshing Generation

With the Mesh Control order, the mesh measurements were calculated. As shown by the image, the ring of columns is meshed in raw four-shaped mesh of 2 mm each. The 6th of March. Second, the network is filtered on components after the free network.

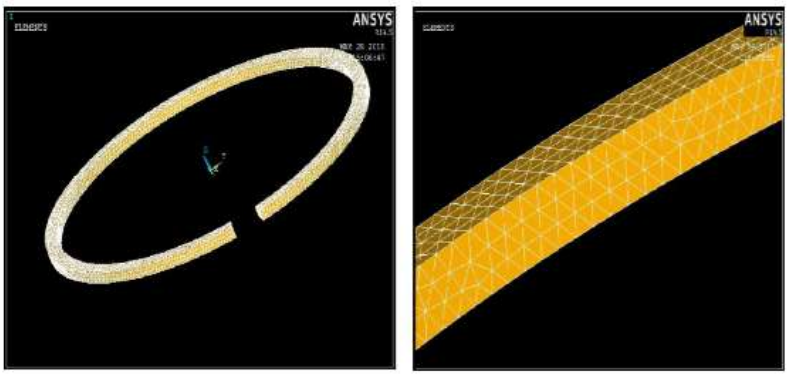

Fig.7: Ring Analysis

The element with a ratio of 0.28 is extracted from 139 GPa-Poisson.
In the process of the inquiry the following constraint principles were considered:
1. The maximum requirements vary based on the complex state of the ring with various essential situations.
2. The load is used in simulation in ANSYS applications, based on loading factors, with "Zone Stress" and "Nodes Forced."
Dilation induces a loss or a rise in width of the triangle. This case undergoes an internal pressure of 10 MPa at the tube's inner level. This expansion load arises in the engine's current condition, due to the flue gas pressure on the loop. All one-end ring equality is constrained (transversal). Fig.8 indicates a nodal solution for the von mises pain. The highest pressure can be found in the inner middle portion of the triangle.

Fig. 8: Stress Analysis

2.3 Compression Analysis

It is the state where friction is induced by the touch charge between the cylinders and the shell. The load is now applied in this situation to the outside of the ring, which results in a reduction in ring diameter i.e. decrease in the gap in this condition. Around the edge of the piston ring is placed a pressure of 15 MPa. Based on one side of the triangle. Again the highest tension is produced in the middle portion of the chain. In fig.8, you will consider the tension remedy from mises.

III. Comparative Analysis

The piston ring material and the materials provided for various piston ring efficiency parameters are discussed in this portion. Saving or wasting fuel requires the volume of fuel expended by the internal combustion engine of the vehicle over a specified period, i.e. kilometers operating on a liter of gas. In this context the replacement of a cast iron ring with a cast iron compound must be specified.

Motor fuel consumption in the immediate future would be increasingly critical for automotive companies as demand for supply services continues to rise. Recent research has demonstrated that lower weight, better contact with the piston ring and one side of the nozzle, and reduced friction losses are likely to improve fuel output by replacing the cast iron ring with engineering compounds.

Engine pollutants are by-products of combustion in automobile engines that leak from a vehicle's tank and enter the atmosphere. Recently, vehicle pollution are particularly significant as they became more mindful of their effect on the planet's environment. The Fig s for this measure are similar to the fuel efficiency. Every option has a small benefit over the previous one. That is because each solution improves the fuel output of the vehicle marginally, which reduces motor pollution. It is most important to consider the existence of any part. If the ring of the piston fails to perform the intended function, seizures of the column-cylinder system create severe problems. Granite / graphite or fly ash / graphite composites are constructed of melted aluminum for a longer time than cast iron and painted steel. The materials are enhanced with corrosion tolerance, mechanical and thermal properties.

The quantities of substitute materials and lacquers used are sure in current operation, and the reinforcing of the column rolls may be constantly reworked with materials and lacquers. During the recent production of more fuel-efficient motors, different parts such as pistons, engine blocks, etc. were substituted with aluminum. A ring of cast iron products, the most popular column ring material, steel, ductile iron, etc. Could be listed. Must be listed. The different coatings of molybdenum disulfide, ceramic coating and PTFE-coating enhance a certain degree of consistency. All of this has been implemented by experts, but few have attempted to build a composite framework that can perform the same function very effectively.

The friction from the piston ring to the cylindrical shaft often cuts off the internal combustion engine's control. Rising the strain is an essential move in growing the output of automotive fuel without reducing vehicle weight. Aluminum composite coated with 9 per cent fly ash / 2 per cent graphite is the perfect way to improve friction. Graphite and fly ash have a lubricating effect that decreases surface friction. The further partly scattered metal, the greater the capacity of the substance to provide a flat sliding surface for lubrication through oil containment. Cast iron is the foundation for contrast and is suitable for effectiveness.

The slipping surface's wear resistance is one of the main features of the piston ring content to view. The internal combustion engine's rough environment can destroy softer materials easily. Several inspectors of piston ring composite were conducting extensive corrosion resistance tests for cast iron replacements. The results indicate that the wear tolerance of the material is outstanding as there is explosive, graphite and fly ash. The composite and hyperluidic fiber-reinforced al-Si are not as strong substitute, because they are based on the particles spread from additives that give the substitute content adequate wear resistance. Corrosion may occur in environments where broad areas of solid origin are common where the particles are frequently widely scattered and combined.

Another important feature is the ability of a material to resist scuffing. As previously mentioned, the cylindrical bolt and the piston ring remain cold right after the engine is switched on. Some scientists have carried out suffering-resistance experiments to equate substitute products with cast iron on cylinder surfaces. Scuffing strength experiments have been performed with comparable findings to wear strength assessments, as all measures have the same configuration and have identical comportments with regard to the components. The examination requires a corresponding load cycled across the research content to analyze the piston and column rings' operation on the cylinder board floor. Materials / splashes are detected and documented. Cast iron, accompanied by a 9 percent aluminum grid / graphite (C3), was again the highest scrub resistance to scrubbing.

Thermal conductivity is a result of a material's ability to conduct heat. The content of the heat conductive piston ring regulates the operating temperature of the internal combustion engine. The ability of piston rings to recover or remove heat affects combustion efficiency, affecting fuel production and engine pollution.

The better the cooling mechanism will hold temperature during the engine installation, because the piston ring content becomes thermally favorable. It removes hot spots in the column ring which may contribute to splitting and ring collapse over time. Aluminum's thermal conductivity is twice that of cast iron.

The expense of producing products involves sourcing, processing, advanced tooling, curing (if applicable) and after-production machining. In terms of the manufacturing costs associated with the product, cast iron piston rings are the cheapest alternative. Composites are hard to make, special precautions are required if composites are to be properly produced.

Alternatives to the use of cast iron liners for aluminum cylinder blocks can be produced at huge production rates. This is an important parameter in this relationship. Cast iron shaft rings are generally used for most vehicle construction. When the requirement is greater for fuel quality, manufacturers would in future need, by receiving the requisite set for composite production, to switch away from cast-iron liners. The initial costs tend to be large, but that can be modified with time.

IV. Conclusion

The following special conclusions were reached in this simulation and experimental investigation on 7075 hybrid alloy composites:

1. The void volume of the synthesized product decreases, with a low filler value. The Al7075 alloy compounds negation levels rose from 0.726 percent to 1.210 percent and from 0.726 percent to 1.551 percent respectively, with grenades and fly ash with rising from 0 percent to 9 percent.

2. For experimental and FEM results, the tensile strength of Al7075 alloy composites is higher than the unfilled composite alloy. For grenets, graphite and fly ash, Al7075 filled alloy composites within the appropriate range, the mean percentage error for tensile strength measured experimentally and by FEM is 5.24 and 6.54. Al7075 alloy composites have a reduced impact energy of grenet / graphite and fly ash / graphite with an increased content of grenets and fly ash.

3. Different loads, sliding speeds, sliding distances and temperature are determined for a steady state wear rates reciprocal (mm3 / m). With increased load, sliding speed and temperature, the wear rate increases, while the increase in wear rate is significant. For the produced composites, increased wear resistance compared with the parent alloy is observed.

4. The wear tests observed under SEM observation show oxide layer development, i.e. mechanic, iron- and aluminum-oxide mixed layer, which contributes to an improved wear resistance of the composite material. The sliding wear pattern and breaks of the SEM results are also well observed.

5. The Taguchi Method is used for optimizing the various experimental wear parameters. And the most important parameters were the load, followed by the reinforcement and sliding speed. The minimum parameters are temperature and sliding distance

6. FEM ring analysis shows validation of the design of the proposed piston ring material. And the stresses produced with the manufactured material were found to be under reasonable limits in the piston configuration.

7. The comparison from conventionally used material and the composite produced is shown on the basis of various essential criteria for a material to be used as piston rind in the comparative analysis.

V. Future Scope

1. There may also be other available filler, which should be studied properly.
2. Another method of composite making as pow we metallurgy may be used in place of stir-casting.
3. To see more real results for the ring performance, experimental set-up can be improved.

References

[1] Open government data platform India. [Online]https://data.gov.in.
[2] The Air (Prevention And Control Of Pollution) Act, 1981, Delhi Department Of Environment , 1983.
[3] Yeow-Chong Tan, Zaidi Mohd Ripin,(2011),Frictional behavior of piston rings of small utility two-stroke engine under secondary motion of piston, Tribology International 44,592–602
[4] John J. Truhana,Jun Qu, Peter J. Blau,(2005), A rig test to measure friction and wear of heavy duty diesel engine piston rings and cylinder liners using realistic lubricants.
[5] O.P. Singh,Yogesh Umbarkar,T. Sreenivasulu,E. Vetrivendan,M. Kannan, Y.R. Babu, (2013), Piston seizure investigation: Experiments, modeling and future challenges, Engineering Failure Analysis,28,302–310
[6] E. Ramjee and K. Vijaya Kumar Reddy, "Performance analysis of a 4-stroke SI engine using CNG as an alternative fuel", Indian Journal of Science and Technology, Vol. 4, No. 7, July 2011.
[7] Peter Andersson, Jaana Tamminen & Carl-Erik Sandström,(2002), Piston ring tribology,A literature survey, VTT Industrial Systems, VTT research notes 2177.
[8] Jayakumar Lakshmipathy,Balamurugan Kulendran (2014),Reciprocating wear behavior of 7075Al/SiC in comparison with6061Al/Al2O3 composites.
[9] Maass, H. and Klier, H. Kräfte, Forces, moments and their equilisation in internal combustion engines / in German. Die Verbrennungskraftmaschine, Neue Folge, Band 2. Vienna, Austria, 1981, Springer-Verlag, 422 p. ISBN 3-211-81677-1.
[10] Ejakov, M. A., Diaz, A. R. and Chock, H. J. Numerical optimization of ring-pack behavior. Society of Automotive Engineers, Inc., 1999, SAE Paper 1999-01-1521, 12 p.
[11] Dowson, D. Piston assemblies; background and lubrication analysis. In: Taylor, C.M. (ed.). Engine Tribology. Elsevier, 1993, Tribology series, 26, pp. 213–240. ISBN 0-444-89755-0
[12] Röhrle, M. D. Pistons for internal combustion engines – fundamentals of piston technology, MAHLE GmbH. Verlag Moderne Industrie. Landsberg/Lech, Germany.1995. p. 70
[13] Haddad. S. D. and Tjan, K.-T. An analytical study of offset piston and crankshaft designs and the effect of oil film on piston slap excitation in a diesel engine. Mechanism and Machine Theory, 30(1995)2, pp. 271–284.
[14] Chittenden R. J. and Priest M. Analysis of the piston assemply, bore distortion and future developments. In: Taylor, C.M. (ed.). Engine Tribology. Elsevier, 1993, Tribology series, 26, pp. 241–270. ISBN 0-444-89755-0.
[15] Dufrane, K. F. Wear performance of ceramics in ring/cylinder applications. Journal of the American ceramic Society, 72(1989)4, pp. 691–695.
[16] Haselkorn, M. H. and Kelley, F. A. Development of wear resistant ceramic coatings for diesel engines, SAE Proceedings of the Annual Automotive Technology Development Contractors Co-ordination Meeting, 1992, pp. 417–424.
[17] Glidewell, J. and Korcek, S. Piston ring / cylinder bore friction under flooded and starved lubrication using fresh and aged engine oils. Society of Automotive Engineers,Inc., 2010, SAE Paper 982659, 10 p.
[18] Glaeser, W. A. and Gaydos, P. A. Development of a wear test for adiabatic diesel ring and liner materials. ASTM 2009, Proc Symp wear test selection for design and application, Dec 2 1992. Miami, FL, USA, ASTM Philadelphia PA, 0066-0558 ASTTA8, ASBN 0-8031-1856-2, pp. 1–16.
[19] Dearlove, J. and Cheng, W. K. Simultaneous piston ring friction and oil film thickness measurements in a reciprocating test rig. In: Recent snapshots and insights into lubricant tribology (SAE SP-1116), Warrendale, USA, 2012, SAE International, SAE Technical Paper Series 952470, pp. 29–38.
[20] Takiguchi, M., Ando, H., Takimoto, T. and Uratsuka, A. Characteristics of friction and lubrication of two-ring piston. JSAE Review, 17(2011)1, pp. 11–16.