QoS analysis of WSN Communication Through accountability of Dead and alive node: A Review

[1]Songita Das, [2]Amarendra Kumar

[1]M. Tech. Scholar, [2]Assistant Professor
CBS Group of Institutions, Jhajjar (Haryana)
Maharishi Dayanand University, Rohtak

***Abstract*: A sensor network is specified in a real-time network with essential features. The network is subject to numerous network level and node level constraints. Clustering refers to the technical enhancement of the network in order to enhance network connectivity. In this study, two step architectures are given to improve connectivity in the sensor network. In the first step, the network is separated into smaller parts, called clusters. The community composition here is performed using the grouping strategies of the various parameter-based K-Means. The parameters used here are a single node and a particular neighbour. Basic parameters of the node included node capacity, probability vector and coverage range. The neighbouring basic parameters are the density and degree of the node. Once the clusters are created, an adaptive communication tree is built. In the second step, the genetic method is used to create an optimal route between clusters to send data packets to the base station.**

1. Introduction

A sensor network is specialized wireless network that is used in real time application with the inclusion of electromechanical components. These sensor nodes are defined with certain restrictions and specifications in terms of energy, power, sensing range, size etc. [1, 2]. These sensors are small, with limited processing and computing resources and they are inexpensive.

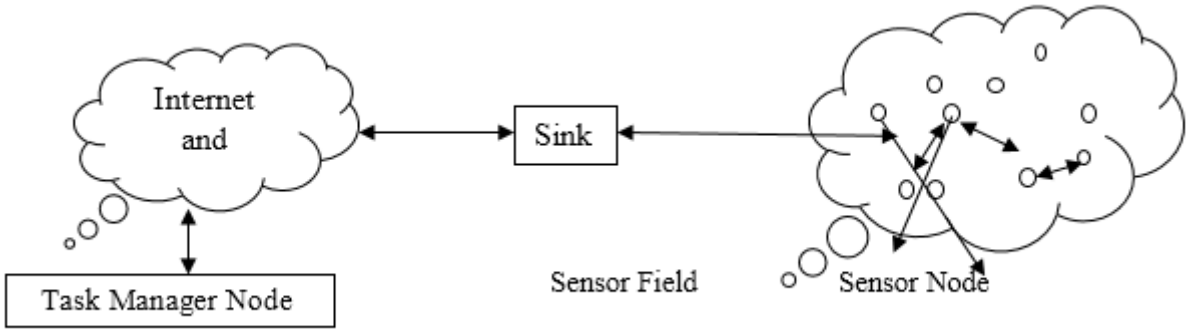

Figure 1: Sensor Network [1]

The type of sensor also plays the crucial role. These sensors are based on the environmental conditions with the specification of different characteristics. These characteristics include the sensing range specification, energy specification, energy consumption constraint, capability to take local decisions etc.

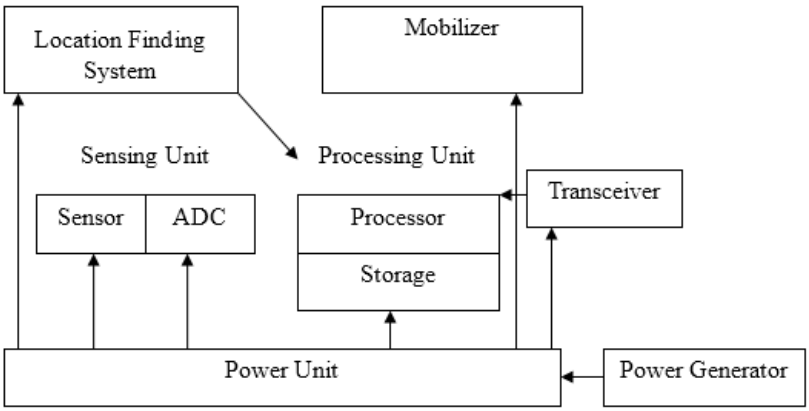

Figure 2: Sensor Node Components [1]

A sensor network is defined as the physical component that helps to extract the environmental feature in the form of signal and convert it some quantized form such as analog or digital signal. These all kind of signal specifications is based on the instrumental analysis performed by the attached microcontroller. The sensor device itself is not a signal component whereas it can be a fully functional device with the inclusion of different featured components such as I/O interface, memory constraint, processor, battery

etc. This component level architecture is shown in figure 2. The figure shows that the sensor is connected to some power source to activate the sensing device and this sensing device performs the location oriented search over the system. This kind of sensing unit is formed using sensor specification and the convertor. This converter will convert the analog signal to digital form. Once the signal is captured, the processing unit is attached to process the signal. This processing unit is having the various components in the form of processor and memory specification. Along with this, the transreciever is attached to perform the direct signal extraction for processing [1].

A sensor network is the small scale network generally distributed in limited geographical area based on the application requirement. Normally because of the smaller capabilities of sensors, this kind of network is composed under dense network architecture. These sensor nodes execute multi-hop communications and supply information to the controller end. The optimization is required in this network under different aspects in terms of localization of nodes or in architectural form of network.

There are different kind of network architectures are available to provide the effective network localization. In the simplest form, the architecture is unstructured and having a dense and random placement of nodes. This kind of network architecture is comparatively costly and not energy effective. In the second form of network architecture, the nodes are placed in a defined pre planned form. In this structured architecture, the nodes are placed under the prejudgment of network requirements as well as communication requirement. This network architecture is considered as an intelligent network and improves the network life and throughput [1]. This localization aspect also includes the dynamic change while generating the network or after the network construction. These aspects include the clustering concept, area coverage, load balancing etc. Clustering is about to divide the network in smaller sub networks in which each sub network is controlled by a centralized controller called cluster head. This cluster head is responsible to manage the communication over the cluster. This clustering is here based on the various concepts including the load balancing. It means, a cluster should have effective number of nodes so that the load of the particular cluster head will not be increased. Another concept associated here is area coverage. Area coverage is considered as the node placement in such way, the maximum area will be covered over the network. It will provide the equalize distribution of nodes over the network will provide the improvement to the network. This kind of architecture is also able to identify the density estimation over the network will provide the reduction in communication failure. It will provide the improvement in terms of network life and network throughput [1] [2].

As the sensor network is able to communicate to the smaller distance, the cooperative communication is performed between nodes. In this communication types, the sensor network performs the inter communication and provide the adaptive feature transmission and exploration. Each sensor collects the information from previous node and transfers it to the next node. This kind of network form also includes the responsibility analysis and the locality estimation to improve the network capabilities.

A sensor network is having its importance in multiple application areas includes the security, military and health application. This kind of network formation also having importance in critical network areas such as chemical response analysis, air pollution analysis, water pollution analysis etc.

2. Literature Review

Han et al. (2010) has provided an energy efficient routing method for heterogeneous sensor network. The network was designed with 3 different sensor nodes based on the memory and resource level. The improved LEACH based cluster election was provided to generate the minimum spanning tree. The inter-cluster routing was defined by the author to provide control to sensor network architecture. A uniform distribution based communication model was provided by the author. The effect of data transmission and relative observation with bit specification was provided. Author improved the energy effectiveness in cluster selection and to provide the inter-cluster routing [1].

Li et al. (2013) has provided a PSO based routing and the routing for inter-cluster communication. The designed method observed the network under energy and hop specific analysis to generate the balanced criteria. Author defined the improvement to hierarchical routing by integrating the swarm based approach. The center control based method was defined to achieve the effective energy consumption and to provide the balanced set communication so that the energy reduction in network will be equalized [2].

Nayak et al. (2015) has defined a work on cluster specific routing method for optimizing the communication in sensor network. a distance and energy preserved method for optimized routing was provided along with movement specific analysis. The sink specific analysis was considered by author to achieve the sure data delivery. The data collection based experimentation was provided to improve the communication. The proposed model is a feature driven method was provided to control the communication by considering the chain leader accurately. Author improved the deployment and communication modeling to achieve the communication reliability [3].

Gopal et al. (2015) has defined a method for cluster specific routing for WSN with specification of mobile sink. Author analyzed the virtual infrastructure and provided the dissemination scheme for improving the effectiveness of network formation. Author used the concept of dynamic route adjustment and the grid specific straight routing. The proposed hybrid method has utilized the network resources and improved the network lifetime. The sink node variation is observed by the cluster heads to provide the reliable and safe communication [4].

Khan et al. (2016) has provided a phase driven analysis method for energy effective routing in sensor network. Author analyzed the constraints of network deployment and provided an energy aware routing for optimizing the network communication. Author used the effective energy aware routing with selective data forwarding. A decision driven analysis was defined to achieve formal verification of next neighbor along with performance optimization. The work is here defined under three phases including the key setup phase, route generation phase and finally the data forwarding phase. Author provided the work to achieve effective results without high energy loss [5].

Banerjee et al. (2014) has provided a work on generating an energy effective and energy-hole bypassing route formation for mobile sink in sensor network. Author defined an improved routing method against the target detection and to propagate the location specific route formation. Author defined the cluster adaptive routing to achieve the energy usage in the network so that the mobile sink specific route will be formed. The method is based on the mobile base station specific optimal routing and to provide round specific cluster formation. A phase specific route setup will be formed so that the network specific routing will be formed. Author provided the cluster formation along with load distribution to achieve the agent specific routing [6].

Mengyao et al. (2014) has defined a work on ring based routing in energy efficient based routing model so that the effective route formation will be done. Author applied the light weight trust evaluation with higher reliability so that the inter-cluster routing will be defined. Author provided the node specific analysis to identify the malicious node and selfish node so that the reliable data delivery will be done. Author provided the energy consumption, delay and dead time specific route formation so that the reliable route will be formed. Author combined the parameter specific route formation using ACO approach for generating the inter-cluster route [7].

Singh et al. (2014) has defined a source specific tree routing with time stamp adaptive routing. Author provided the protocol and topology adaptive route formation with security mechanism and parameter setup. Author defined the sink adaptive and source adaptive routing to drawback the network limitations and to provide the destination driven communication in the network. Author identified the multiple paths between source and destination and evaluates them under different parameters. Later on the forwarding node and the packet through the transfer so that the effective and adaptive route formation will be done. The level specific analysis and the neighbor node selection relatively were provided to evaluate the cost of neighbor nodes. Author reduced the transmission cast and improved the network communication [8].

Daoyuan et al. (2007) has defined a work to provide the analysis on effectively deployed harsh network with specification of infrastructure. A routing method with major characterization is presented to observe the network and node life time. The integrated-LEACH is proposed by the author to utilize the network resources effectively and to provide the energy adaptive communication in the network. The defined method used the two hops routing with relaying node based network significance analysis. Consumption on distributed nodes is here defined to generate the route without energy consumption. The performance evaluation was defined to improve the protocol architecture [9].

Manjula et al. (2014) has provided the privacy preservation based route formation in sensor network. An effective routing measure is provided to achieve the assets monitored communication in sensor network. Author provided the asset specific location analysis with preserved analysis under base station controlled communication. A greedy based routing method was provided to achieve the comparative work solution to achieve the network privacy and to provide the relatively effective network communication. A network model based communication along with adversary attack is provided to achieve the packet driven estimation. The semi local observation and deployment is achieved to identify the traffic monitoring and to provide the effective and event specific deployment. The method has reduced the delay and energy consumption in the network [10].

Xu et al. has defined an analytical research on routing protocol to provide energy effective communication path. Author focused on the typical routing protocols called SPIN, GEAR, LEACH and Directed Diffusion to provide the energy adaptive and reliable communication route. The key factors of this routing method include the optimal path formation and the energy adaptive network communication. A work on network routing and path formulation is provided to achieve the effective route formation. A data center specific analysis was provided to achieve the event specific region analysis to generate the constructive route in adaptive network. The local topology information was processed under cluster specific analysis to maintain the communication links in comprehensive form and generate a periodic routing in the network. A comparative analysis on protocol features was provided for effective route formation and characterization [11].

Phani et al. (2010) has defined a routing fusion and localization based routing algorithm to generate the cognitive sensor network. Author provided the distributed sensing based work phenomenon to generate the sensitive routing network with formation of routing protocol and explored the restricted network resources. The algorithmic evaluation was provided to achieve the exploration to the analytical network and to improve the protocol under capabilities analysis. A spectrum sharing and management measure was provided to achieve the effective network communication. An assumption specific modeling was provided to control the communication using directional antenna. The proposed method provided the communication switching between sleep and wake nodes. The leveling based assumption analysis was defined on a dense network and provided the reliable network formulation. A condition specific analysis and schematic network formation was provided to generate the effective network route in sensor network [12].

Agrawal et al. (2014) has defined an energy effective routing and communication in range switched network. A work on network environment processing and the restricted node analysis was provided along with range switching to provide the gradient switching in the network. Author provided the potential gain analysis and the throughput analysis for the network with higher throughput. Author defined an improvement to the GBR protocol under throughput and range switching. Author improved the rate of switching to improve the communication throughput [13].

Kodali et al. (2013) has worked in multiple energy adaptive routing protocols for sensor network. A base station controlled and energy conservative communication method is provided relative to neighbor selection. An adopting hierarchical routing was provided to reduce the energy consumption. A two phase routing protocol was proposed using TL-LEACH and Direct Diffusion routing method. An operational analysis on the cluster head selection and cluster setup was provided for effective network communication. An operational assessment on routing protocol is provided to analyze the clusters on each cycle and generated the effective communication route. The stationary base station specific route formulation was provided to improve the communication in sensor network. An energy adaptive routing measure was defined on neighbor routing node selection is defined for effective route formation [14].

Zhao et al. (2012) has defined a cluster based and energy effective routing for sensor network. Author defined the timer specific neighbor selection with multi-hop hybrid network processing for resource utilization. Author defined a method to select the cluster so that inter-cluster and intra-cluster communication will be formed. The cluster head selection and relative communication observation was provided to achieve the distance deductive analysis so that the safe network will be formed. Author provided the work on cluster election and provided the energy adaptive routing in the dense network. Author also improved the data transmission and phase specific communication. The routing model defined here includes the reduction to energy consumption while forming the network and to improve the network resource utilization. Author combined the TDMA with radio amplification to achieve the adaptive network communication [15].

Banerjee et al. (2014) has used the concept of cluster framed communication in real time environment and provided the secure communication in real environment. Author provided the realistic derivation to the integrity specific confidential constraint setup to provide the secure cluster integrated communication to reduce the energy consumption. The base specific secure communication control was defined at base station level and at cluster level. The algorithmic model used the hash encoded method encrypt the message at node level and the decryption is achieved at base station. The key exchange is done at cluster level based on which the packets are handover to cluster head. This light weight key sharing method reduced the energy consumption in the clustered communication [16].

Quan et al. (2009) has defined a cluster gene based sensor network adaptive communication in real environment. The method provided the observation to the network at prior stage and later on defined some restrictions to generate the object identity. The overhead of time and delay is here estimated under various performance vectors. The method provided the communication by reducing the cost and improving the trust vector. The dedicated and the broad cast communication are here secured by applying different candidate key based communication methods [17].

Palacios et al. (2012) has defined a secure communication scheme for clustered sensor network and provided the reduction in energy consumption. The designed method is a security feature adaptive cluster head selection method that provides the constraint specific analysis applied under radio range analysis and with power limit specification. A secure communication layer is here provided to provide secure inclusion and exclusion of node in the network. The time frame based estimation is provided to identify the trust vector and steady state of node. The trust level computation is here considered to identify the effectiveness of security measure and relatively applied the secure communication constraints [18].

Dahane et al. (2013) Author defined the behavior specific communication with specification of different node states. These stages are based on the assigned trust weights. The communication frequency, neighbor relation and the communication throughput are observed to assign these weights to nodes. Based on this adaptive trust vector, the key shared communication is applied over the untruthful nodes. The method has improved the security and integrity of clustered sensor network [19].

Nirmala et al. (2010) has defined an improved secure broadcast method in clustered sensor network. Author defined the phase driven analysis to compute the key and to provide the communication at the prior analysis defined at the time of deployment. The immediate and the independent authentication was provided with specification of base station and the cluster specific communication. The compromised node generation for the mobile agent was provided to evaluate the security responsibility and the performance measure. Author defined as secure key distribution method with specification of shared secret so that the paired communication between the node and cluster head will be performed. Author achieved the secure authenticated communication in clustered sensor network [20].

Khedlkar et al. (2014) the nodes are activated periodically so that the effective resource utilization will be obtained. A chain driven optimized communication with convergence speed and algorithm is provided win a certain extent. Node behavior analysis is provided for effective node detection to improve coverage performance [21].

Shazly et al. (2013) He has defined work on an analysis of node uncertainty to improve network target coverage in real time. The authors defined probabilistic estimates under different shortcomings. To improve the node connectivity, a network-specific coverage analysis is provided here. Using this algorithmic approach, localization errors and location errors are resolved.

The coverage level and block level target mapping is provided to achieve the optimized coverage solution. The connectivity processing with target set is defined to improve the interval specific communication [22].

Zhang et al. (2009) has provided a work on 1-hop target coverage to provide critical node observation for sensor network. A local environment analysis method is defined to provide the node dimension analysis with scalability vector to improve the coverage criteria. Author observed the energy and waiting time to improve the optimization of distributed coverage algorithm. Author processed the design constraints to improve the computational complexity and communication. The work model also achieved the scalability and stability for this real time network [23].

Jamali et al. (2010) has defined an algorithmic model based on region analysis to generate the cover set and provide the activation of the covers based on the base station connectivity. The subset based activation is observed based on the target node monitoring. The sensor cover based life time analysis is provided for transformation of connected cover problem. The method has improved the computational complexity and generated the solution using proposed heuristic algorithm. The work is defined to generate the effective covers under energy and distance level observation so that the connected communication will be improved and energy consumption will be reduced [24].

Kim et al. (2012) has developed a new heuristic algorithm based on the communication weight assignment and applied a probabilistic measure for target cover generation. The greedy weighted algorithm is defined based on the connectivity and coverage constraints analysis to improve the communication connectivity. The diverse sensing and characterization is provided to improve the probabilistic coverage model with constraint specification. Author improved the network deployment, energy sensing and sink node tracking to improve the coverage and defined an optimized scheduling method. A probabilistic investigation is here provided to improve the coverage model for improving the coverage under uncertainty parameter [25].

Zorbas et al. (2009) has proposed the algorithm for computing the desired cover set formation to improve the coverage performance. The characteristics driven node structure analysis is applied based topology parameter specification with extensive network life mapping. The experimentation is here provided to achieve the topology independent network tracking to improve the target coverage to optimize the network life time. Author provided the work on complete and the partial target coverage based on the cluster formation. The heuristic algorithm is here integrated to provide the phase specific constraint specific weight assignment. The path tree formation with cover set construction is here defined to improve the target coverage [26].

Lu et al. (2014) provided work on directional assignments and adjustable node mapping in specific directional instances to improve target cover. Here we investigate the target point to maximize the area of detection. A polynomial time based factor approximation based solution is provided to achieve the solution to maximization problem. The performance guidance and featured improvement is here suggested to improve the coverage and achieved the effective communication solution with performance guarantee. The life time maximization is here provided to achieve the direction target mapping in real time networks [27].

Chaturvedi et al. (2015) we have defined a trust-based observation of goal coverage issues, and have effectively provided a basic communication solution. It provides a confidence metric formula to ensure coverage and an energy conservation method to provide integrated network communications. The communication confidence is provided is here defined neighborhood analysis to estimate the trust level. The convenient trust node is here identified to reduce the overhead and reduced the energy consumption in the network [28].

Biop et al. (2014) Author also provided the scheduling algorithm to set the activation sequence so that the effective utilization will be obtained. The method includes the weighted greedy algorithm with specification of multiple constraints to improve the efficiency vector so that the performance of the target coverage will be improved [29].

Ren et al. (2014) The sensing coverage based quality optimization is here provided to improve the algorithm in centralized and distributed environment. The accurate network monitoring for period specification is defined to predict the energy harvesting. The adaptive framework is defined to achieve the energy prediction based fluctuation so that the effective target monitoring will be obtained [30]

3. Clustering Architecture

Routing protocols have the basic purpose of making networks efficient and efficient. For sensor nodes in a routing protocol group based on a cluster, each group of nodes has a CH or gateway.

Advantages/Distances

In this subsection, the advantages and disadvantages of the presented work are described

Advantages

The major contribution of this work is given here under

Resource Utilization

This work demonstrated a clustered architecture under the constraints of sensor nodes to execute communications in a sensor network. These limits are identified with respect to power, small range of detection, limited memory, etc. This task breaks down the entire network into smaller sub networks. These sub networks provide for a reduced range of communication. To reduce multipath communication over the network, aggregate communication is defined here. Adaptive routing and communication on your network can reduce the power consumption.

Balanced Network

This work provided an improved clustering architecture that realized balanced clusters which were energy-adaptive. This work avoided the possibility of clustering with overweight and overweight. Also taking into account the importance of the nodes when forming the cluster, which improves the reliability of the clustering process.

Multihop aggregative communication

Multi-hop communication overall runs between the heads of the cluster. This approach to communication has lowered network communications and competition, improving efficiency and reliability.

Disadvantages

Statistical

Most of the consideration in this work is given under the statistical analysis and the constraints specification. The work does not include any optimization algorithm. The improvement to the efficiency can be achieved using some optimization algorithm.

Fault Analysis

The work is defined to optimize the network communication under architectural constraints. No consideration is provided for any kind of fault tracking or the encoding mechanism. The data in transmitted in the original form.

Static Network

The network is defined with static constraints, no dynamic change is defined in the simulation such as mobility, inclusion of new nodes, node removal etc.

4. Conclusion and Future Scope

A sensor network is defined in real time network with critical features. The network suffers from various network level and node level restrictions. Clustering provides the architectural improvement to the network to improve the network communication. In this work, two phase architecture is provided to improve the communication in sensor network. The network is split into smaller segments in the first phase, called clusters. Here group formation is done using the grouping techniques of multiple parameter-based K-Means. The parameters included here are node specific and neighbor specific. The node specific parameters included node energy, probability vector and coverage range. The neighbor specific parameters are density and degree of node. Once the clusters are generated, the spanning tree adaptive communication is formed. In second phase, the genetic approach is applied to generate the optimize path between clusters to deliver the data packets to base station.

References

[1] H. Li, "LEACH-HPR: An energy efficient routing algorithm for Heterogeneous WSN," Intelligent Computing and Intelligent Systems (ICIS), 2010 IEEE International Conference on, Xiamen, 2010, pp. 507-511.

[2] X. Li, W. Gang, L. Zongqi and Z. Yanyan, "An energy-efficient routing protocol based on particle swarm clustering algorithm and inter-cluster routing algorithm for WSN," 2013 25th Chinese Control and Decision Conference (CCDC), Guiyang, 2013, pp. 4029-4033.

[3] S. P. Nayak, S. C. Rai and S. K. Pradhan, "MERA: A Multi-clustered Energy Efficient Routing Algorithm in WSN," 2015 International Conference on Information Technology (ICIT), Bhubaneswar, 2015, pp. 37-42.

[4] D. Gopal and Suriyakala C. D, "Performance evaluation of hybrid energy efficient cluster based routing scheme for mobile sink based WSN," 2015 International Conference on Control, Instrumentation, Communication and Computational Technologies (ICCICCT), Kumaracoil, 2015, pp. 558-564.

[5] N. A. Khan, K. Saghar, R. Ahmad and A. K. Kiani, "RAEED-EA: A formally analysed energy efficient WSN routing protocol," 2016 13th International Bhurban Conference on Applied Sciences and Technology (IBCAST), Islamabad, 2016, pp. 346-349.

[6] R. Banerjee and C. K. Bhattacharyya, "Energy efficient routing and bypassing energy-hole through mobile sink in WSN," Computer Communication and Informatics (ICCCI), 2014 International Conference on, Coimbatore, 2014, pp. 1-6. [7] L. Mengyao, Y. Zhang and X. Li, "Ring-based security energy-efficient routing protocol for WSN," The 26th Chinese Control and Decision Conference (2014 CCDC), Changsha, 2014, pp. 1892-1897.

[7] D. Singh, S. Sharma, V. Jain and J. Gajrani, "Energy efficient source based tree routing with time stamp in WSN," Signal Propagation and Computer Technology (ICSPCT), 2014 International Conference on, Ajmer, 2014, pp. 120-124.

[8] D. Wang, H. Tian and S. Wang, "Energy-Efficient Routing Research for WSN," 2007 International Conference on Wireless Communications, Networking and Mobile Computing, Shanghai, 2007, pp. 2413-2415.

[9] R. Manjula and R. Datta, "An energy-efficient routing technique for privacy preservation of assets monitored with WSN," Students' Technology Symposium (TechSym), 2014 IEEE, Kharagpur, 2014, pp. 325-330.

[10] J. Xu, F. Ning and D. Jiang, "The analysis and research of WSN's energy efficient routing protocols," Automatic Control and Artificial Intelligence (ACAI 2012), International Conference on, Xiamen, 2012, pp. 2056-2059.

[11] G. Lakshmi Phani, K. Venkat Sayeesh, K. Vinod Kumar and G. Rama Murthy, "ERFLA: Energy efficient combined routing, fusion, localization algorithm in cognitive WSN," 2010 Seventh International Conference on Wireless and Optical Communications Networks - (WOCN), Colombo, 2010, pp. 1-5.

[12] T. Agrawal, R. S. Kushwah and R. S. Tomar, "An Energy Efficient Routing with Range Switching in WSN," Computational Intelligence and Communication Networks (CICN), 2014 International Conference on, Bhopal, 2014, pp. 354-357.

[13] R. K. Kodali and N. Sarma, "Energy efficient routing protocols for WSN's," Computer Communication and Informatics (ICCCI), 2013 International Conference on, Coimbatore, 2013, pp. 1-4.

[14] H. Zhao, W. Zhou and Y. Gao, "Energy Efficient and Cluster Based Routing Protocol for WSN," Computational Intelligence and Security (CIS), 2012 Eighth International Conference on, Guangzhou, 2012, pp. 107-111.

[15] K. Banerjee, H. Sharma and B. K. Chaurasia, "Secure Communication for Cluster Based Wireless Sensor Network," Computational Intelligence and Communication Networks (CICN), 2014 International Conference on, Bhopal, 2014, pp. 867-871.

[16] Q. Zhou and J. Li, "Secure Routing Protocol Cluster-Gene-Based for Wireless Sensor Networks," 2009 First International Conference on Information Science and Engineering, Nanjing, 2009, pp. 4098-4102.

[17] E. Garcia-Palacios, N. Mehallegue and G. Ali Safdar, "Providing security and energy efficiency in wireless ad-hoc sensor networks through Secure Cluster-Head Election (SEC-CH-E)," Telecommunications and Signal Processing (TSP), 2012 35th International Conference on, Prague, 2012, pp. 47-51.

[18] Dahane, N. E. Berrached and A. Loukil, "Homogenous and secure weighted clustering algorithm for mobile wireless sensor networks," Control, Engineering & Information Technology (CEIT), 2015 3rd International Conference on, Tlemcen, 2015, pp. 1-6.

[19] M. B. Nirmala and A. S. Manjunath, "Secure program update using broadcast encryption for clustered wireless sensor networks," Wireless Communication and Sensor Networks (WCSN), 2010 Sixth International Conference on, Allahabad, 2010, pp. 1-6.

[20] R. Khedikar and A. Kapur, "Energy effective target coverage WSNs," Issues and Challenges in Intelligent Computing Techniques (ICICT), 2014 International Conference on, Ghaziabad, 2014, pp. 388-392.

[21] M. H. Shazly, E. S. Elmallah and J. Harms, "Location Uncertainty and Target Coverage in Wireless Sensor Networks Deployment," 2013 IEEE International Conference on Distributed Computing in Sensor Systems, Cambridge, MA, 2013, pp. 20-27.

[22] H. Zhang, H. Wang and H. Feng, "A Distributed Optimum Algorithm for Target Coverage in Wireless Sensor Networks," Information Processing, 2009. APCIP 2009. Asia-Pacific Conference on, Shenzhen, 2009, pp. 144-147.

[23] Mohammad ali Jamali, Navid Bakhshivand, Mohammad Easmaeilpour and Davood Salami, "An energy-efficient algorithm for connected target coverage problem in wireless sensor networks," Computer Science and Information Technology (ICCSIT), 2010 3rd IEEE International Conference on, Chengdu, 2010, pp. 249-254.

[24] M. Kim, Y. h. Kim, I. S. Kang, K. w. Lee and Y. H. Han, "A scheduling algorithm for connected target coverage under probabilistic coverage model," The International Conference on Information Network 2012, Bali, 2012, pp. 86-91.

[25] Zorbas, D. Glynos and C. Douligeris, "Connected partial target coverage and network lifetime in wireless sensor networks," 2009 2nd IFIP Wireless Days (WD), Paris, 2009, pp. 1-5.

[26] Z. Lu and W. W. Li, "Approximation algorithms for maximum target coverage in directional sensor networks," Networking, Sensing and Control (ICNSC), 2014 IEEE 11th International Conference on, Miami, FL, 2014, pp. 155-160.

[27] P. Chaturvedi and A. K. Daniel, "An Energy Efficient Node Scheduling Protocol for Target Coverage in Wireless Sensor Networks," Communication Systems and Network Technologies (CSNT), 2015 Fifth International Conference on, Gwalior, 2015, pp. 138-142.
[28] B. Diop, D. Diongue and O. Thiare, "A weight-based greedy algorithm for target coverage problem in wireless sensor networks," Computer, Communications, and Control Technology (I4CT), 2014 International Conference on, Langkawi, 2014, pp. 120-125.
[29] X. Ren, W. Liang and W. Xu, "Quality-Aware Target Coverage in Energy Harvesting Sensor Networks," in IEEE Transactions on Emerging Topics in Computing, vol. 3, no. 1, pp. 8-21, March 2015.