# Design and Analysis of ATV Rear wheel Hub having light weight and high torque carrying capability

**[1]Ch Sagar, [2]K Brahma Raju**

[1]Research Scholar, [2]Professor
Department of Mechanical Engineering
Sagi Rama Krishnam Raju Engineering College, Bhimavaram, A.P., India -534204

***Abstract*: The objective of this paper is to design an ATV rear wheel hub that can carry high torque with least self-weight as compared to that of a commercial vehicle for example Polaris ranger sportsman rear wheel hub.**

**Theoretically calculating the RPM and torques that will be applied on the wheel hub to validate the design by performing analysis on the hub that is designed with the help of solidworks16 CAD software where outputs of theoretical calculations are fed as inputs to the analysis software on this designed hub with different materials into consideration. Constantly analyzing the weak points and modifying those weak points to achieve a good factor of safety from which we can finalize the best design and the best material that is highly compatible to it.**

**Index terms- ATV: All-Terrain Vehicle, RPM: Revolutions per minute, CAD: Computer Aided Design**

## I. INTRODUCTION

All-Terrain Vehicles are designed for single seater as well as multi seater with all-wheel drive or a rear wheel drive. The design of rear wheel hub discussed below is carried out for a single seater rear wheel drive ATV vehicle taking into consideration, where B&S 305cc air cooled engine is taken as the prime mover which is then connected to a CVT followed by a spool drive gearbox and finally to the wheels with the help of a transmission shaft and wheel hub. The way the design process including the CAD software selection for designing the rear wheel hub and for analyzing it is discussed below.

## II. CAD SOFTWARE SELECTION TO PERFORM MODELLING AND ANALYSIS OF REAR WHEEL HUB

Modelling of Rear wheel hub requires several basic commands and some advanced commands without which making a 3D model of the desired output is very difficult.

Basic Commands

- Sketch - Line, Circle, Arc, Rectangle, Trim, Fillet, Pattern etc.
- Features – Extrude, Revolve, Extrude Cut, Fillet, Loft, Swept.

Advanced Commands

- Simulation – Study Advisory, Result Advisory

The requirements for modelling ATV matches with three CAD software's available in the market they are

- Solidworks
- Catia
- Unigraphics

Out of the three suitable software for modelling it is observed that solidworks16 is user friendly and also got additional analysis add-on feature by which the designed model can be analyzed without loading this model into any other external analysis software. With this add-on we can make the necessary changes in the design according to the weak areas shown in the analysis. This feature saves lot of time.

## III. MODELLING OF REAR WHEEL HUB

Wheel hub design is based on three major factors

- Torques that need to be delivered.
- Available volume at the rim offset.
- Rim PCD.

**Considerations:**

In the design of ATV Rear wheel hub, a standard ATV rim of Polaris company sportsmen model with 12 inches rim diameter having 4 mounting holes of 160mm PCD with a 2-inch rim off set is considered and the hub for the same is modelled.

**Step by step Procedure involved:**

Step1: Go to Sketch and select right plane.
Step2: Draw PCD (pitch circle diameter) with 160mm diameter.
Step3: Draw a circle of 10mm diameter on one of the horizontal vertices of the PCD circle.
Step4: Select offset entities command and provide 8mm outer offset to 10mm circle.
Step4: Go to Circular pattern and select 10mm circle along with the offset and provide number of patters to 4.
Step5: Draw a circle at the center of the PCD circle with diameter 42mm.

Step6: Draw tangent line from the 8mm offset circle to 42mm circle on both the sides.
Step7: Go to extrude command and extrude the sketch for 17 mm.
Step8: Go to sketch and select front plane.
Step9: Draw an inclined line from the top of the PCD circle the edge of 17mm extrude.
Step10: Click on Sketch out.
Step11: Select the backplane of the extrude and click on sketch command.
Step12: Draw two circles of 35mm and 17mm each at the PCD center.
Step13: Extrude the sketch for 35mm.
Step14: click on Sketch out.

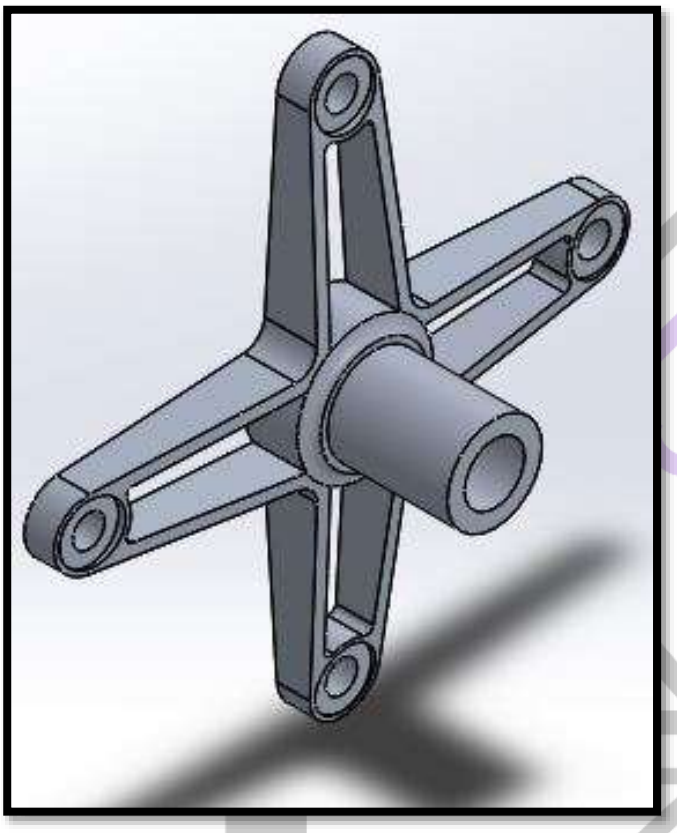

Fig 1. Isometric View of Rear Wheel Hub

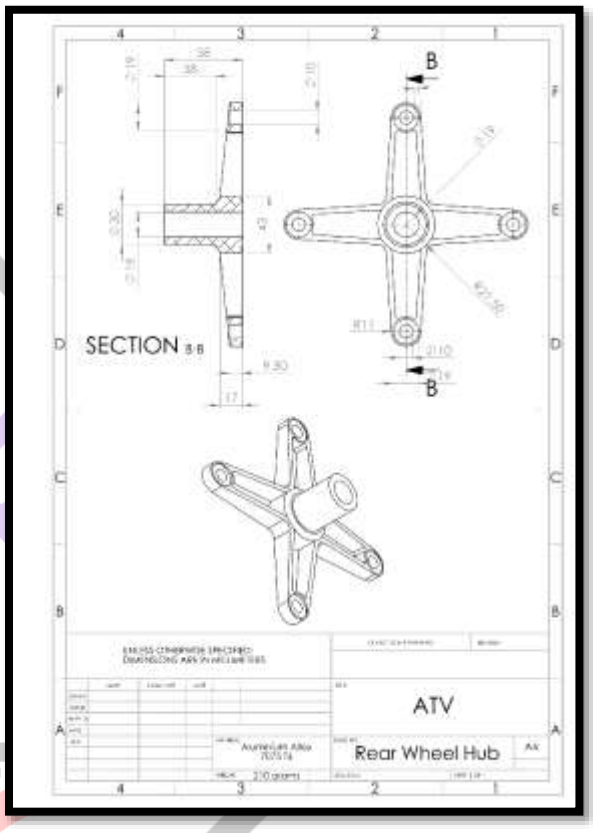


Fig 2. Drawing of Rear Wheel Hub

## IV. ANALYSIS OF REAR WHEEL HUB

Analysis always require two thing, one is how much should the externally applied force/torque should be and where it should be applied. The force or torque values are theoretically calculated and fed to the analysis software. The most important thing before performing the analysis is knowing how the modeled part is going to function in the real world. As our objective is to design a hub of light weight it is observed that aluminum alloys play a major role in terms of weight and strength. So, the material taken for analysis is Aluminum Alloy 7075 T6.

**Calculations:**

Stage-01: Engine outputs (or) CVT drive pulley inputs
Max. Speed = 3800 rpm
Max. Torque = 19.57 Nm

Stage-02: CVT driven pulley outputs (or) Gear box inputs.
Max. Speed = 3800/0.43 = 8837.2093rpm
Max. Torque = 19.57x3= 58.71 Nm

Stage-03: Gear box outputs (or) Half shafts inputs.
Max. Speed = 8837.2093/14.5= 609.462rpm.
Max. Torque = 58.71x12= 704.52Nm
Gearbox output
Max. velocity =(πDn)/60
=(3.14x0.5842x609.462)/60
=57Km/Hr.
Max. Torque =598.842 (Considering 15% transmission losses)

From the above calculations the gearbox is producing 600Nm of torque which will be delivered to the tires with the help of wheel hub. So, while performing analysis in solid works software the following steps are to be followed

Step1: Click on simulation and select new study.
Step2: Give a name to the study as dynamic analysis of Rear wheel hub.
Step3: Right click on mesh available in the model tree on the left side of the screen.
Step4: Click on create mesh followed by reset.
Step5: Right click on external loads and select torque.
Step6: Select hub center as the axis of application of torque.
Step7: Apply 600 Nm of torque value.
Step8: Select hub PCD holes as fixtures.
Step9: Right click on mesh and select mesh and run option.
Step10: Wait few minutes while the software perform analysis on the hub.
Setp11: Check the results like Displacement & FOS as show in fig 3 & fig 4.
Step12: Analyze the weak points and do necessary modifications to the design.
Step13: Repeat Step1 to step11 until a desirable factor of safety is achieved.

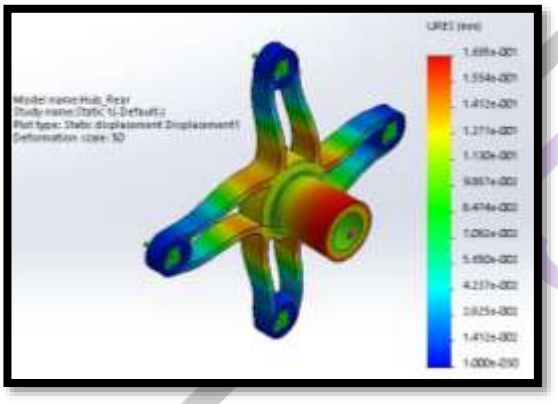

Fig 3. Displacement of Rear Wheel Hub

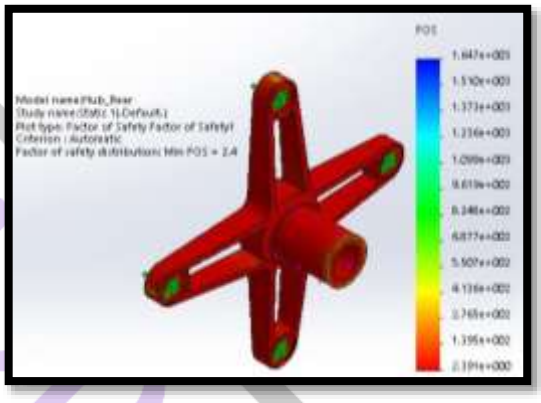

Fig 4. Factory of Safety of Rear Wheel Hub

## V. RESULTS AND DISCUSSION

By following a proper procedure and choosing light weight material, with help of solidworks16 CAD software we were able to design a best rear wheel hub that can carry high torque of 600 Nm and achieving 2.4 as a factor of safety with a least self-weight of 210 grams.

## VI. CONCLUSION

The present study explains that how the design of an ATV wheel hub can be initiated, what are the considerations to be taken while designing and in what way it can be analyzed to rectify the weak areas by constantly modifying the design until the design gets a safe value in terms of factor of safety and total deformation.

## REFERENCES

[1] Vivek Dhameliya, Nishant Sheta, on “Design and Analysis of Rear Wheel Hub & Steering Knuckle”, International Journal of Technical Research and Applications, Volume 4, Issue 3 (May-June, 2016), PP. 403-408, Department of Mechanical Engineering Marwadi Education Foundation Group of Institute Rajkot, India

[2] Deep Shrivastava, A study on Designing of All Terrain Vehicle (ATV), International Journal of Scientific and Research Publications, Volume 4, Issue 12, December 2014 1 ISSN 2250-3153

[3] Mr.Sangram K. Pisat, Mr.Aditya S. Phule, Mr.Rohan R. Shinde, Prof. Arun V. Javir, on “Design and Analysis of Hub and Knuckle of FSAE Race Car”, IJSRD - International Journal for Scientific Research & Development| Vol. 4, Issue 02, 2016. Department of Mechanical Engineering, Rajendra Mane College of Engineering and Technology, Ambav, Mumbai University.

[4] Thomas D. Gillespie; Fundamental of Vehicle Dynamics; ISBN: 978-1- 56091-199-9; February 1992