Protection of Distribution Transformer by Using Concept of VAG

[1]Kiran S. Kumbhar, [2]Rutuja V. Dalvi, [3]Prof. R.M. Zende

[1,2]Student of BEE, [3]Assistant Professor
Electrical Engineering Department
Zeal College of Engineering and Research Narhe, Pune, Maharashtra, India-411041

***Abstract*— In power system distribution sector is very important section as per protection purpose. Because maximum faults are occurred at distribution level because human mistake as well as environmental condition. Protection of Distribution transformers is very important role in power system. The distribution networks throughout the world of modern power systems. In this invention, the fault-current-limiting capability is enabled in power transformers by accepting the theory of virtual-air-gap (VAG) in electromagnetics. The concept of VAG is nothing but the saturate a certain portion of the magnetic core to change the reluctance of magnetic loops. VAG is not an actual air gap but a saturated portion of the magnetic core, which restricts the magnetic flux to follow through it. In distribution transformers, electric power is transferred between electric windings through the magnetic core interface. By changing the dc current, the redistribution of magnetic flux and isolation between the electric windings can be achieved. The power rating of the power electronics drive in VAG can be much smaller than the power rating of power transformers, which would greatly reduce the cost of device.**

I. INTRODUCTION

In power system number of section are divided such as generation, transmission, distribution. In that we study about the distribution system. In distribution system we use number of equipment for distribute the electric power. But in that transformer is very important component of distribution system. This distribution transformer is used to step down the voltage of power system. The voltage is step up to application rating. Whenever transformer is not live in circuit then we can't able to step down the distribution voltage. In case short circuit fault occurs on distribution system then very high amount of current is flowing through the transformer. To reduce the high quantity of current through power system we use reactor in series with the faulty section. But in this method more losses occurs at the time of fault in reactor winding. To avoid this losses we use one method i.e. VAG method.

What is VAG method? The VAG method is nothing but virtual Air Gap method. In this method we create virtual air gap in core of transformer. This not a actual air gap its only magnetic saturated portion of core. In this method we use relation between current and flux. The relation is directly proportional. As current increases then flux also increases and vice-versa. So we produces constant flux in core against main flux. Because of this operation constant flux will oppose to main flux and magnitude of secondary or load side current will decreases. In this method we use number of component for the protection of transformer. Listed below and shown in block diagram.

II. Block Diagram

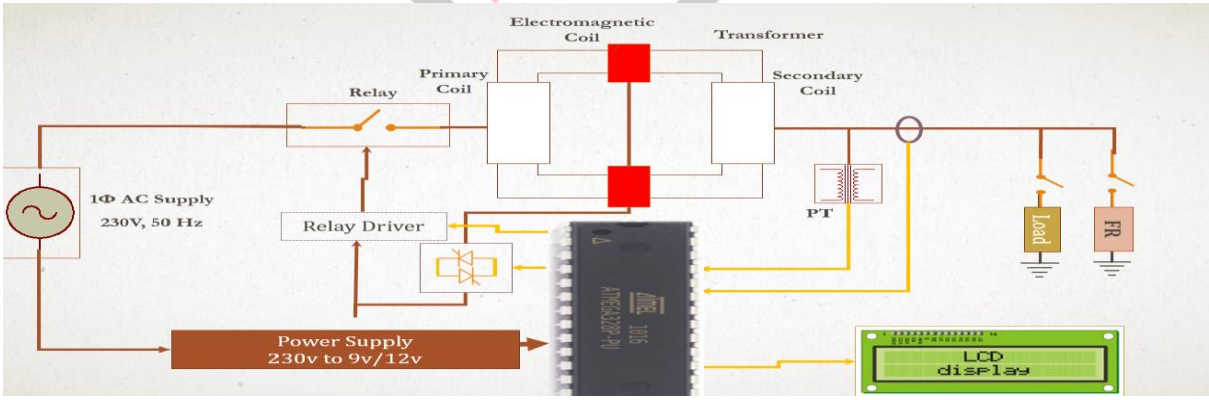

Fig (B): Block Diagram

III. Working Flow of Project

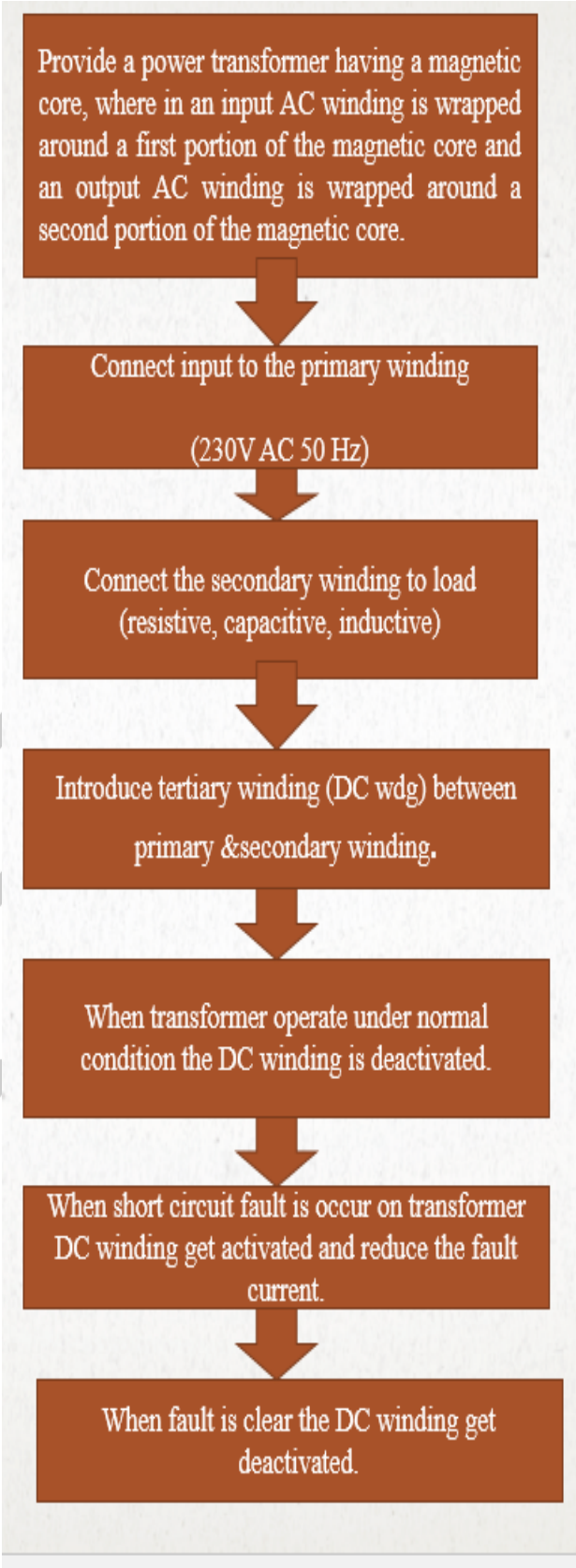

Fig (C): Working Flow

IV. Construction of tertiary winding

The following figure shows construction of tertiary winding (DC winding). This winding is wound on core of transformer to create the virtual air gap. This winding is high current and low voltage. When short circuit fault is occur the dc winding is activated change the reluctance of transformer core and reduce main flux due this fault current is reduce.

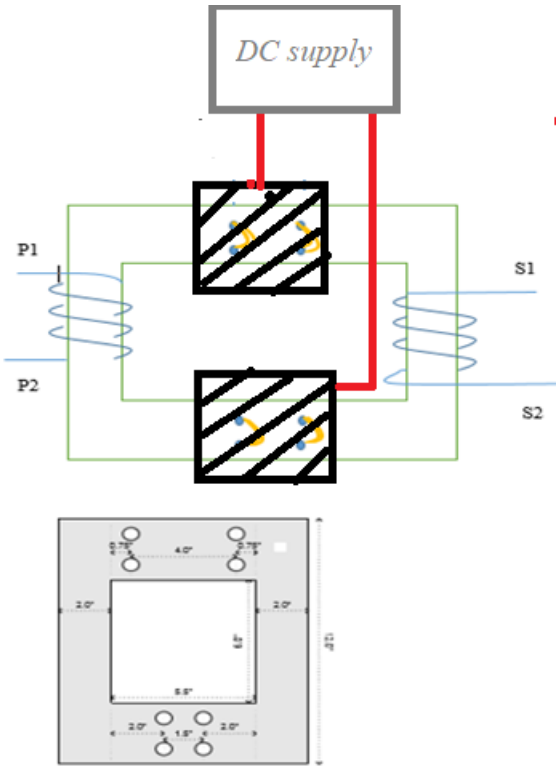

Fig (D): Construction of tertiary winding

By using this one dc winding we can control fault current about 40% to 60% and when two windings are connected then its control 70% to 80%. In this project design 200 turns dc winding for current control. Battery is used to feed dc supply to tertiary winding and battery voltage is vary from 9v to 12v dc. The dc winding controlling is done by power electronic devices such as TRIAC, IGBT, and MOSFET etc.

V. Concept of virtual Air Gap

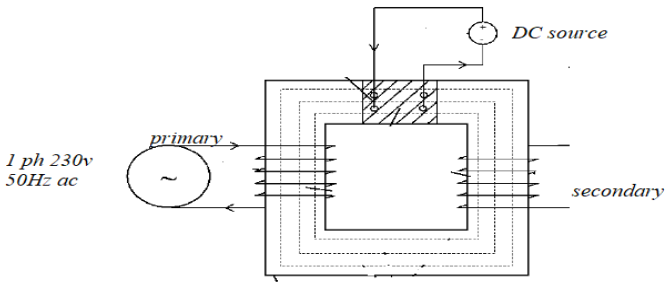

Fig (E): Concept of VAG

In above figure saturated portion is known virtual air gap. This not actual air gap. The tertiary winding is introduce between primary and secondary winding of transformer. Supply is given to the tertiary is DC. This winding is high current low voltage winding. When the DC winding is activated the main flux of transformer reduces due change in reluctance of main flux. As the flux is reduces current will also reduce. Due this advantage virtual air gap concept used for protection of transformer.

VI. Need Virtual air gap

Day by day load on power system is increase due this complexity of power system is increase. As the complexity is increases the chance fault also increase. To avoid this current limiting reactor is connected in series with circuit breaker to limit fault current. But as the load is increase fault current also increase. As the fault current increase the size current limiting is also increase. Due to this circuit become a bulky also cost, maintenance power loss will be increase.

To avoid this virtual air gap concept is used. To create VAG the tertiary winging is connected between primary and

secondary winding. The supply given to this tertiary winding is DC. This supply is varied by using power electronics devices (TRIAC, IGBT, MOSFET).When the short circuit fault is occur on transformer the DC winding is activated. As DC winding is activated the main flux will be reduce due this fault current also reduces and transformer gets protected from short circuit fault.

VII. Devices used in project

a. Atmega328p Nano controller
b. Power supply
c. LCD
d. Hall effect based Current sensor
e. Potential transformer
f. Relay

a. Atmega328p Nano controller

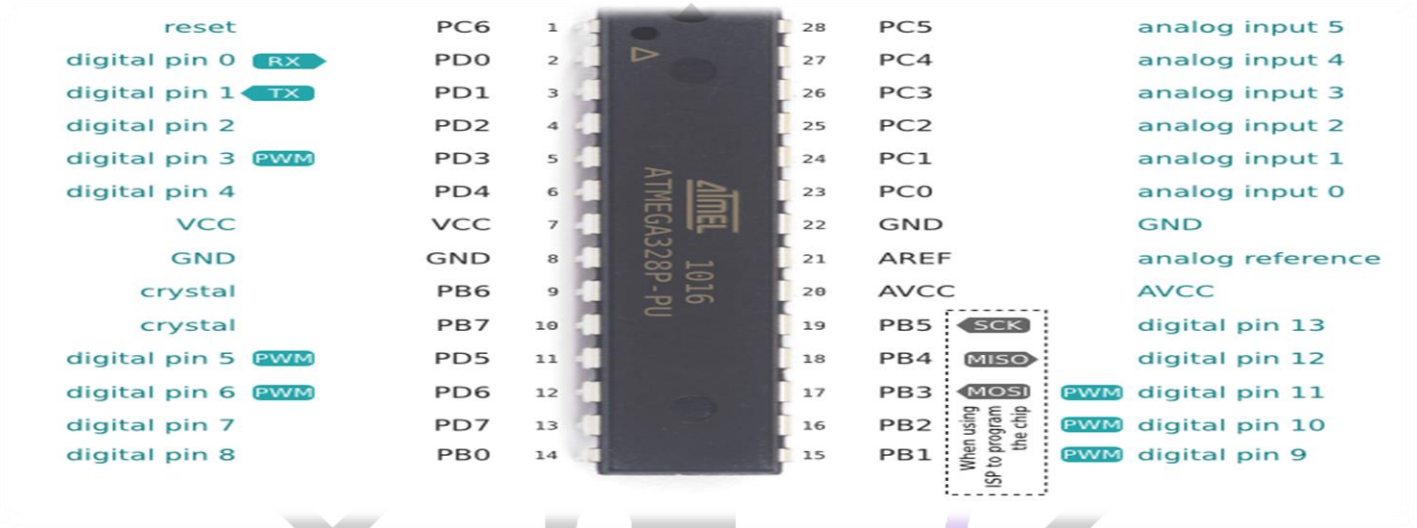

Fig (G-a): Atmega328p

- Microcontroller: ATMEGA328P
- Operating voltage: 5V
- Input Voltage Limits: 6-20V
- Digital I/O Pins: 14 total-6 of which can be PWM
- Analog Input Pins: 6
- Maximum DC Current per I/O pin at 5VDC:40ma
- Maximum DC Current per I/O pin atn3.3VDC:50ma
- Flash Memory: 32KB
- RAM Memory: 2KB
- EEPROM: 1KB
- Crystal: 16MHz

b. Power supply

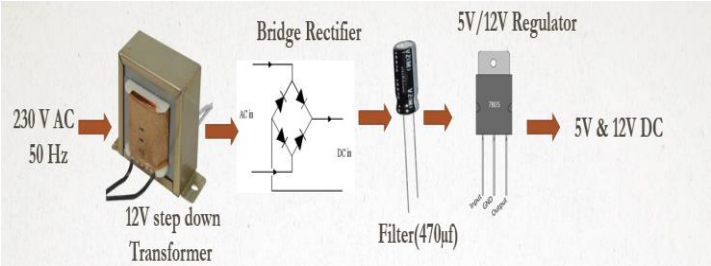

Fig (G-b): Power supply

The above power supply circuit shows regulated power supply to Atmega328p. Operating voltage of voltage of Atmega328p is varies from 5v to 9v. In above circuit 230v AC 50Hz supply is given to the given to step down transformer and this transformer can step down voltage up to 12v. This 12v is given to the bridge rectifier circuit which is convert AC voltage into DC voltage. But this DC supply contain harmonic/noise/notch. To reduce this harmonic/noise/notch filter is connected after bridge rectifier and then this notch free supply is given to regulator. The regulator IC used in this project is 7809. The regulated output of 7809 IC is 9v.

c. LCD

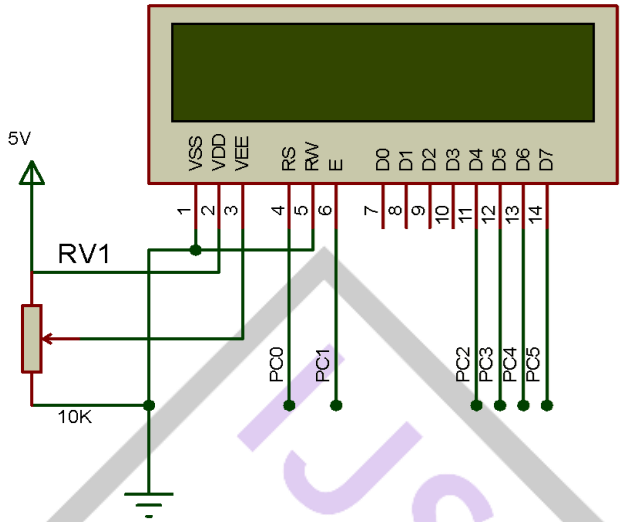

Fig (G-c): LCD 16*2

Liquid crystal display used in this project is16*2 character.
This means 16 character per line by 2 lines. Its require single +5v for logic unit and LCD drive powered separately. If a 4-bit bus is used the LCD will require 7 data lines. There are three control lines referred as EN, RS, & RW.

EN= Enable.
RS= Register select (when RS is high (1), data being sent).
RW= Read/Write.

d. Current sensor circuit

The Hall Effect current sensor used for measurement current as well as for protection. There are two ways to use Hall Effect current sensor

a. Pass current and get magnetic field.
b. Pass magnetic field and get current.

In both the condition voltage will proportional to the current/magnetic field applied. The first type sensor can be used for to measure accurately DC and AC currents both.

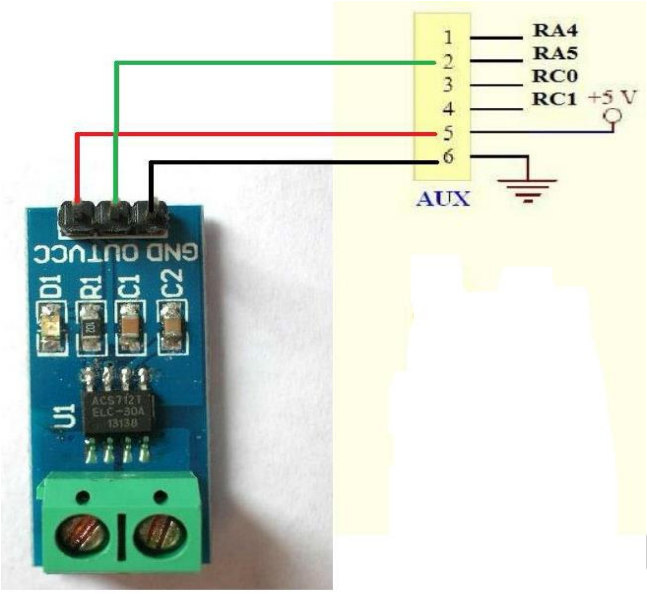

Fig (G-d): Hall Effect current sensor

The Hall Effect current sensor used in this project is ACS712. The rating of this current sensor may be 5A, 20A, & 30A. In this project we use the 30A current sensor. The difference of voltages gives proportional current to micro controller.

1. When voltage difference is positive then current will be increase.
2. When voltage difference is negative current will be decrease.

e. Potential transformer

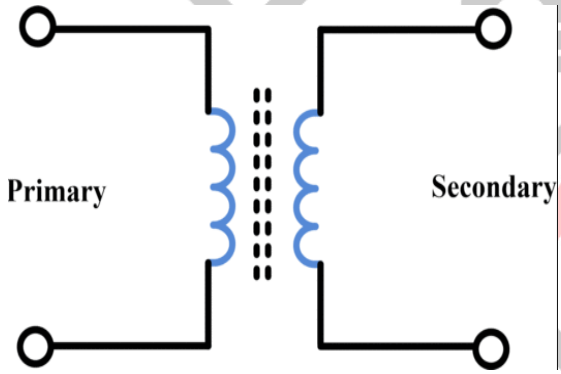

Fig (G-e): Potential Transformer

Potential transformer (PT) is required to measurement of voltage and for protection of transformer. In potential transformer measurement of high voltage is done by step downing voltage at secondary side. Due this PT is low voltage & high current transformer. The PT is connected in parallel with secondary side of main transformer. The rating of PT is 230v - 6v.

f. Relay

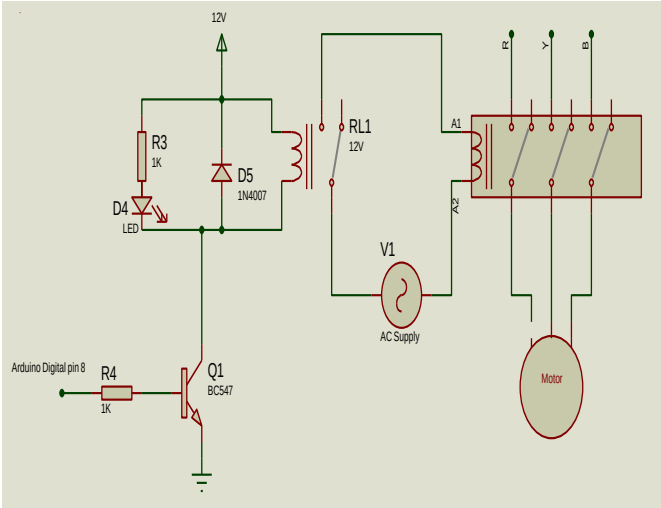

Fig (G-f): Relay circuit

Relay is basically sensing device which is sense the current above rated value. The relay contact are generally open under normal condition and close under fault condition. This relay circuit gives trip command to breaker when fault current flows through relay coil. An electromechanical relay contains an electromagnetic coil that moves a metal arm to make and break an electrical connection. The relay used in this project has 3 contact as follows,

a. COM= Common
b. NC = Normally closed
c. NO = Normally open

In this project SPDT relay is used. The rating of this relay is 10A and 220v AC and 24v, 10A DC

g. Conclusion:

In this project, we concluded that reluctance of main flux can be changed by introducing the tertiary winding between primary and secondary winding. This method is used for protection of transformer from short circuit fault current. Due to this no need any current limiting reactor also it reduce the power loss, cost of maintenance and reduce the size of protection circuit.

References

[1] Reuben lee and Donald s. Stephens IEEE transaction on magnetics , vol. Mag-9, no.3 September 1973
[2] Dr. Yuechang zhang (novel power transformer with fault current limiting capability).
[3] Asphaq hussain (ref. Book -electrical machine)
[4] B. L. Thareja (ref. Book of electrical technology volume 2)
[5] Hameyer, Kay (2001). "Electrical Machines I: Basics, Design, Function, Operation". RWTH Aachen University Institute of Electrical Machines. p. 27.
[6] Mehta, S.P.; Aversa, N.; Walker, M.S. (Jul 1997). "Transforming Transformers [Superconducting windings]".*IEEE Spectrum***34** (7): 43–49. doi:10.1109/6.609815. Retrieved 14 November 2012.
[7] *ANSI/IEEE C57.13, ANS Requirements for Instrument Transformers*. New York, N.Y.: IEEE. 1978 (superseded, 1993). p. 4 (§3.26).ISBN 0-7381-4299-9.
[8] Parker, M. R; Ula, S.; Webb, W. E. (2005). Whitaker, Jerry C., ed. "The Electronics Handbook" (2nd ed.). Taylor & Francis.pp. 172, 1017.ISBN 0-8493-1889-0.
[9] Miller, Wilhelm C.; Robbins, Allan H. (2013). *Circuit analysis : theory and practice* (5th ed.). Clifton Park, NY: Cengage Learning. p. 990.ISBN 978-1-1332-8100-9.Retrieved 25 September 2014.
[10] Hameyer, Kay (2001). "Electrical Machines I: Basics, Design, Function, Operation". RWTH Aachen University Institute of Electrical Machines.p. 27.
[11] International application published under patent cooperation treaty (PCT) (19) World Intelligent property, (43) International publication Date 9 June 2016 (09.06.2016) WIPO PCT WO 2016/089351 A1