A review of power factor correction rectifiers

[1]Nilakshi N. Patil, [2]Prof. Sneha S. Bageshwar

[1]Student of ME Electrical, [2]Assistant Professor,
Electrical Department,
TSSM'S, BSCOER, Narhe, Pune,India

***Abstract*—This paper gives a review of power quality converters .The main concerns of such converters are the unity power factor operation and low harmonic distortion of the input AC waveforms that can be ensured by generating a DC voltage higher than the grid peak voltage amplitude, which makes use of switching devices inevitable. Different PFC rectifiers are reviewed in this paper which can operate in buck, boost, and buck-boost mode. This rectifiers improves the power quality in terms of power factor correction, reduces total harmonic distortion at input ac mains with unidirectional and bidirectional power flow. From overall analysis five level boost rectifiers with reduced switch count has better performance than other rectifiers.**

***IndexTerms*—Improved power quality, power factor correction, harmonic reduction, AC-DC converters.**

I. INTRODUCTION

The most used equipment in the industries for improving power quality operation and reduce total harmonic distortion at input AC mains is PFC rectifiers. Conventionally, ac-dc converters i.e. rectifiers are used to provide controller and uncontrolled unidirectional and bidirectional dc power. But they having problems like inject current harmonics, poor power factor at input ac mains, caused voltage distortion and slow varying rippled dc output at load end, low efficiency and large size of ac and dc filters.etc. Due to their increased applications, new breed of rectifiers has been developed using IGBTs, MOSFETs, etc. These converters are classified as a power factor correctors (PFCs), pulse width modulation (PWM) rectifiers, multilevel rectifiers, etc.[1] Because of severity of power quality problems some other devices such as a passive filters, active filters, and hybrid filters along with conventional rectifiers are developed. But these filters are quite costly, heavy, and bulky. Also they are having losses which reduce overall efficiency of the complete system. By observing this, it is considered better option to include such converters as an inherent part of the system of ac-dc converters that provides reduced size, higher efficiency, and flexible operation of the system. This paper reviewed the different power quality converters.

II. POWER QUALITY CONVERTERS

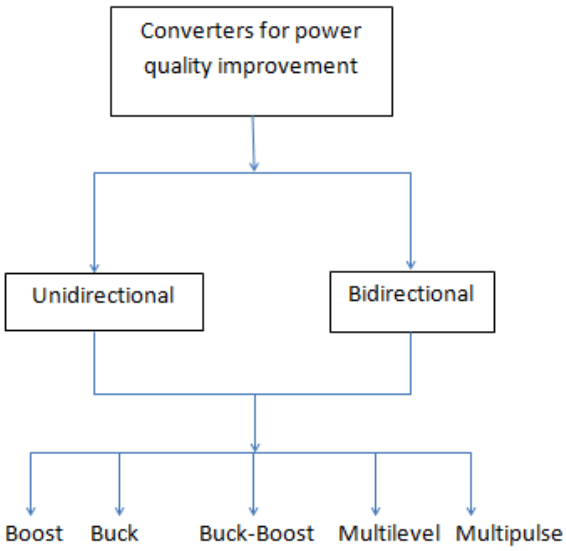

Fig1:Classification of converters for power quality improvement

As shown in the fig. 1 power quality converters are classified as unidirectional and bidirectional. These converters are further sub classified as a boost, buck, buck-boost, multilevel [3]. In this paper different PFC rectifiers are reviewed.

Single-phase Switch Clamped Rectifier with High Power Factor

The high current harmonics, low power factor and high pulsating current drawn from the diode rectifiers are the main power pollution in the industry products. The passive filters are used to filter low order harmonics but they are having drawback such as a bulk passive elements, fixed compensation characteristics and resonance with system impedance. This scheme presents a single phase three-level PWM rectifier to provide high input power factor and low current harmonic distortion.

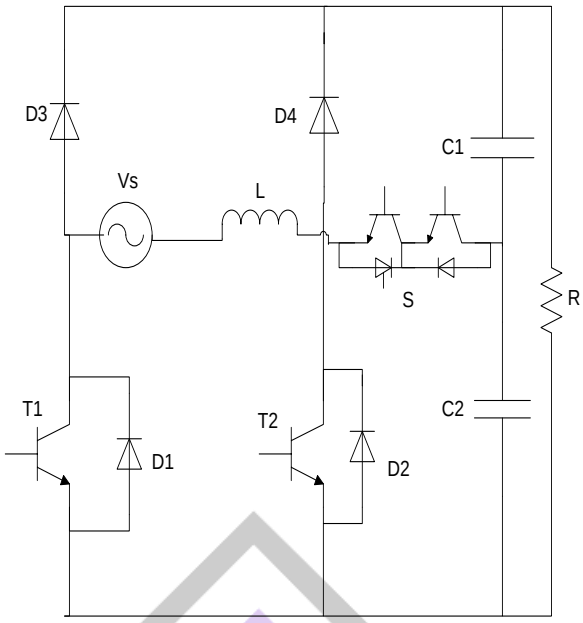

Fig 2:Clamped switch rectifier

Figure 2 shows a Switch clamped rectifier in which a region detector of line voltage, a neutral point voltage compensator and current controller are used for generating a three level voltage pattern on the ac side. The power switches are turned on and off according to the control scheme to draw nearly sinusoidal line current in phase with mains voltage [6]. Also using control technique, problem of voltage unbalance of two capacitors on the dc link is reduced. Control scheme uses PWM modulation technique.

Single-Phase Semi-Bridge Five-Level Flying Capacitor Rectifier

For unity power factor applications in case of grid connected rectifiers, semi bridge converters offer significant advantages over their full bridge counterparts because of their reduced active switch count. This technique provides two benefits of reduced semiconductor voltage stress for given dc output voltage, allowing lower voltage rating devices with reduced conduction losses. The second benefit is, significantly improves the zero crossing distortion of the rectifier compared with its two level by allowing a reduced per unit boost filer inductance to be used.

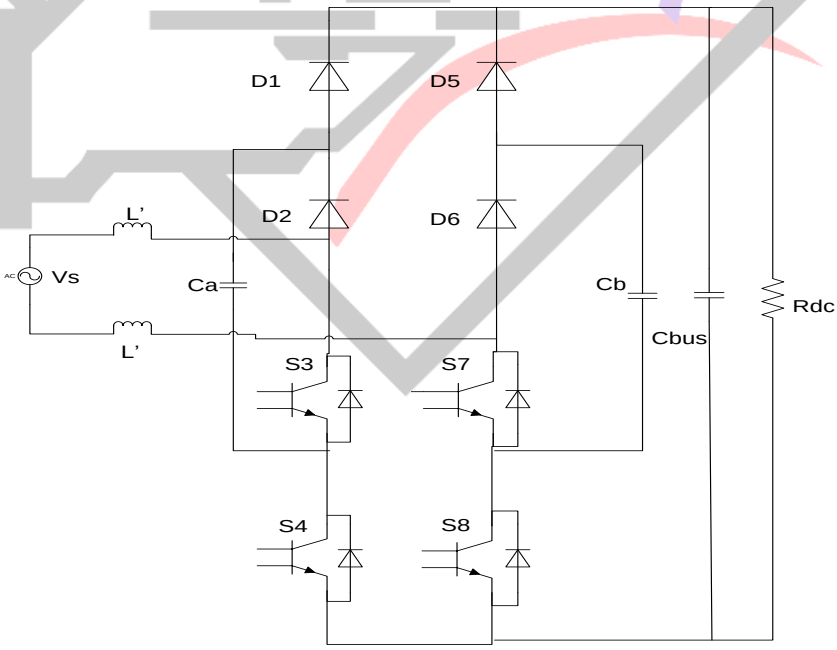

Fig 3:Single phase Semi Bridge Flying Capacitor rectifier

Figure 3 shows reduced topology semi bridge FC rectifier in which two active upper switches in each phase leg have been replaced by diodes. This arrangement minimizes the system active switch count, allows the use of more efficient lower voltage rated devices and avoids dead time distortion in the switching processes between the active switches. All boost PFC and semi bridge rectifiers are well known o produce a low frequency input current distortion when operating in continuous conduction mode because of their inherent inability to operate in the second and fourth quadrants [5].

For operation as an active rectifier at unity power factor and continues conduction, the commanded fundamental voltage reference is slightly displaced from the incoming ac grid voltage to regulate the power flow through the input boost filter to maintain a stable voltage on the dc output bus. The FC topology also allows lower voltage-rating devices to be used, with a consequential improvement in converter efficiency. However, semi-bridge rectifiers have intrinsic operating limits that require a tradeoff between current distortion and switching ripple.

Three-Phase Five-Level Bidirectional Buck - Boost type PFC Converter

In this scheme a three phase high power factor five level buck - boost type converter is presented which is well suited for acting as interface between residential DC power distribution system and AC grid.

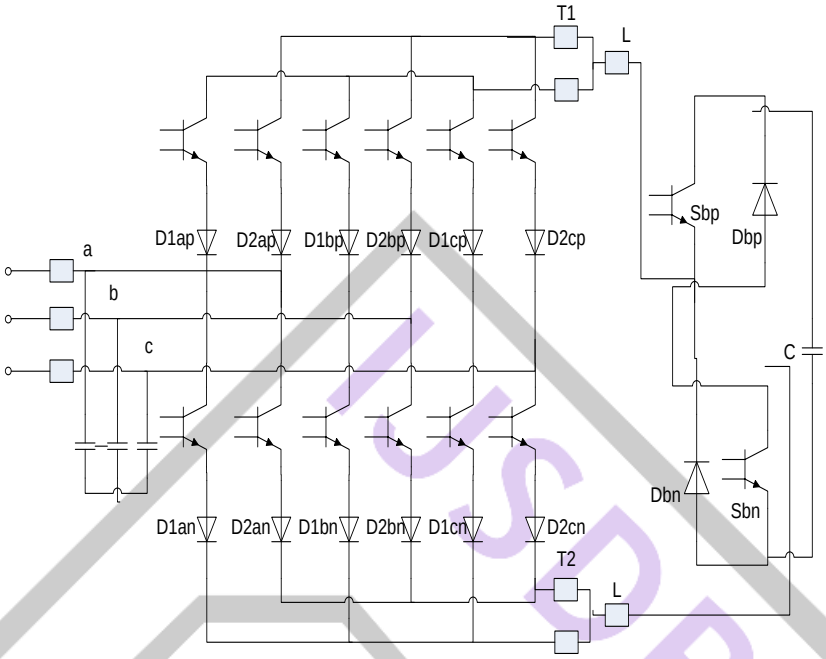

Fig 4: Three phase five level bidirectional Buck -Boost type PFC converter

As shown in the fig. 4 , the power converter is constructed with two phase shift modulated six switch buck type PFC converters, efficiently paralled across their DC-link by interphase transformers, and a voltage and/or current inverting switching section. This PFC converter is suitable for smart house, electrical vehicle (EV) battery charging and high power lighting system. By proper modulation of the power transistors in continuous conduction mode (CCM), the current I_{DC} can be strategically distributed to the three phases in such a manner that after he input low pass AC filtering the system feeds sinusoidal currents [4]. But this technique requires large number of switches that affects the manufacturing size directly.

Five level buck-boost PFC rectifier

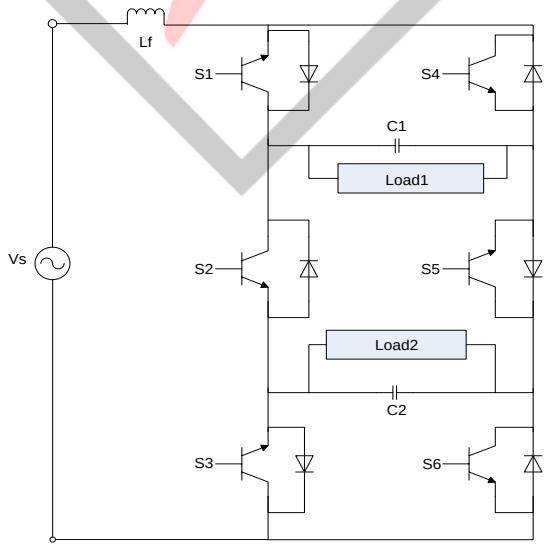

Fig 5: Five level buck boost PFC rectifier (CTS)

This rectifier (Capacitor Tied Switches) is derived based on the packed U-cell converter. This rectifier is having two DC output terminals that can be connected to two separated loads and generates five level voltage waveform at the rectifier input where I is connected to the grid through an inductive filter. This rectifier can work in both buck and boost modes with low switching

frequency just by changing the DC voltage reference. The main advantage of this CTS rectifier is generating high ratio DC voltage in buck mode as well as producing the DC voltage amplitude equal to the AC source peak value. A PI controller has been designed andimplemented on this converter to produce the requiredreference waveform which is sent to multicarrier PWM andgenerated pulses run the associated power switches. This topology having high efficiency and good dynamic performance while drawing sinusoidal and unity power factor current from the AC grid [2].

Five level reduced switch count boost PFC rectifier

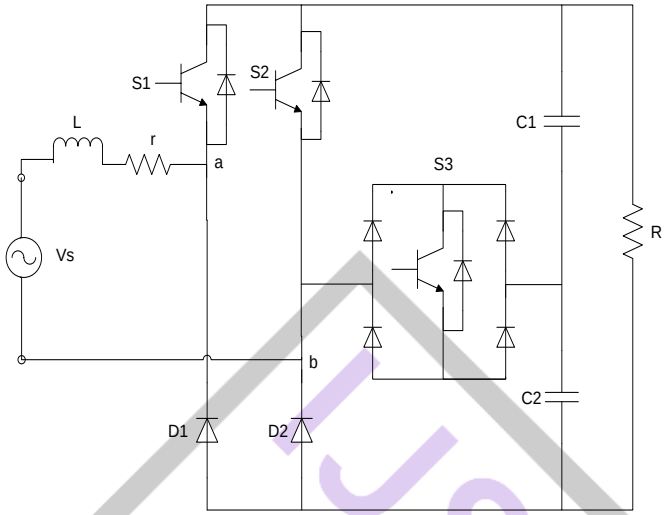

Fig 6: Five level boost PFC rectifier with reduced switch count

Figure 6 shows the five level boost PFC rectifier with reduced number of switches. It consists of a three active switches and six diodes and one bidirectional switch which is connected between leg b and midpoint of DC capacitors to provide different paths for current in order to produce five voltage levels at the output. In a grid-connected application, the converter voltage imposes its harmonics into the current waveform.To overcome the high switching frequency, a 4- carrier PWM technique has been adopted This rectifier would have 5-level voltage waveform at the input so it will generate low harmonics affecting the grid current directly results in using smaller size filters compared to the conventional two-level or two-stage rectifiers[7] . Reduced size of passive components results in light weight and cheaper manufacturing cost of the converter. This rectifier is used in medium voltage high power applications in which switch suffers low voltage stresses and operates at low switching frequency.

III. Conclusion

A comprehensive review on PFC rectifiers has been carried out in this paper. These PFC rectifiers considered being better alternative foe power quality improvement because of reduced size of overall converter, higher efficiency, lower cost, and enhanced reliability compared to other power quality improvement. The paper highlighted that the five level boost rectifier with reduced switch count helps to improve the power factor of the input AC voltage and current. One of the main issues of switching rectifiers is the high switching frequency that has been reduced using PWM technique through adopting multicarrier modulation scheme. This rectifier can be used in medium voltage high power applications.

References

[1] B. Singh, B. N. Singh, A. Chandra, K. Al-Haddad, A. Pandey, and D. P. Kothari, "A review of single-phase improved power quality ACDC converters," Industrial Electronics, IEEE Transactions on,vol.50, pp. 962-981, 2003.
[2] H. Vahedi, P.-A. Labbe, H. Y. Kanaan, H. F. Blanchette, and K. Al-Haddad, "A New Five-Level Buck-Boost Active Rectifier," in IEEE International Conference on Industrial Technology (ICIT), Spain, 2015, pp. 2559-2564.
[3] B. Singh, B. N. Singh, A. Chandra, K. Al-Haddad, A. Pandey, and D. P. Kothari, "A review of three-phase improved power quality AC-DC converters," Industrial Electronics, IEEE Transactions on,vol. 51,pp. 641-660, 2004.
[4] T. Soeiro, M. Ortmann, and M. Heldwein, "Three-phase five-level bidirectional buck-+ boosttype PFC converter for DC distribution systems," in Industrial Technology (ICIT), 2013 IEEE International Conference on, 2013, pp. 928-933.
[5] C. A. Teixeira, D. G. Holmes, and B. P. McGrath, "Single-phase semi-bridge five-level flying-capacitor rectifier," Industry Applications, IEEE Transactions on,vol. 49, pp. 2158-2166, 2013.
[6] B.-R. Lin and T.-L. Hung, "High-power-factor single-phase switch clamped rectifier," IEE Proceedings-Electric Power Applications, vol. 149, pp. 208-216, 2002.
[7] Hani Vahedi, Ambrish Chandra, Kamal Al-Haddad, "Five-Level Reduced-Switch-Count Boost PFC Rectifier with Multicarrier PWM", IEEE Transactions on Industry Applications, vol. 52, pp. 4201-4207, 2016.