Artificial Insulin Therapy in the Regulation of Blood Glucose

[1]D.Roshinie, [2]S.Swathy, [3]V.Sangeetha, [4]C.Ram Kumar

[1, 2, 3]UG Students, [4]Assistant Professor
BME, Dr NGP Institute of Technology
Coimbatore.

***Abstract*— Artificial pancreas is a technology in development to help people with diabetes to automatically control their blood sugar level by providing the substitute function of a healthy pancreas. In early days, type 1 diabetes is treated with insulin, exercise and diabetic diet and type 2 diabetes is treated with weight reduction, diet and exercise and oral medications. Since 2000, India has been in the first place with higher number of people with Diabetes mellitus, followed by China and USA. If the pancreas fails to function, the artificial pancreas can be replaced and it was proved that the artificial pancreas performs as effectively as the human pancreas. But if one side, the technology develops, the drawbacks also grow up. In this technique, some of the drawbacks in artificial pancreas are: No complete cure for diabetes; Artificial pancreas consists of two external devices that must always be connected; difficult for athletic patients who play sports that the device must be connected properly. To overcome this drawback, a new proposed model is Implantable Nano-pancreas which will be helpful for athletes and other hardworking diabetic patients. The implantable pancreas system consists of a small capsule which is implanted by the pancreatic beta cells which secrete insulin corresponding to the blood sugar levels. In this method, the capsule containing the chip, glucose sensor and pancreatic beta cells is swallowed by the patient. The blood glucose level is displayed on our smart phone by developing an android application.**

Index Terms— Glucose, Nano-chip, Artificial Pancreas and micro controller.

I. INTRODUCTION (HEADING 1)

The existing artificial pancreas system has the following parts: **CGM** (Continuous Glucose Monitor), **Algorithm** (controlled by the computer), **Insulin pump** and the **Patient.** There are 3 types of Artificial Pancreas system, which are: Threshold Suspend Device System, Insulin-only system, Bi-hormonal Control system.

The **Target-Skin Distance** is responsible for stopping the insulin delivery for a temporary period, when the blood sugar level reaches low. They are also called as "Low Glucose Suspend System". This system is also used when the patient is not able to respond because of low sugar levels. The disadvantage is the patient should periodically check the glucose levels and provide themselves with insulin.

The **Insulin-only** system checks the CGM values and delivers the insulin in increasing or decreasing amount. These are hybrid systems that provide insulin bolus if the patient is unable to take food during low glucose level.

The **Bi-Hormonal Control** system uses 2 algorithms that control the insulin pump to give two different hormones- one to reduce the glucose level and another to increase the glucose level. The function of this system is same as a normal pancreas of a human.

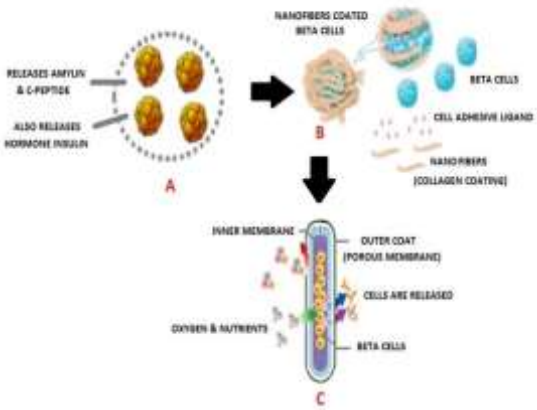

Fig 1: Outline of implantable pancreas
(A. pancreatic cells, B. Capsule coated with collagen fibers, C. The final look of the nano capsule)

To overcome the above mentioned disadvantages of the artificial pancreas, we enter into Nanotechnology as the nanoscience is used in all fields nowadays. In this method, the nano capsule is loaded with pancreatic cells, also named as Islets of Langerhans which are capable of secreting insulin. The capsule is nanoporous that it only the insulin to move in and out but it blocks all other

particles such as immune cells, RBC, WBC, Antibodies and Antigens. Thus this technique provides an advantage that it cannot be contaminated and it is bio-compatible to human body. The main advantage is that it is non-invasive.

Our project is to develop a nano-capsule which is biocompatible and performs the functions of the pancreas and maintains the blood glucose level permanently. It must be capable to produce the insulin in increased or decreased amount corresponding to lower or higher sugar levels of our body.

II. EXISTING SYSTEM

The Artificial Pancreas system manages the blood sugar level automatically and thereby improves the lives of many people suffering from diabetes. It monitors the glucose level periodically and delivers corresponding amounts of insulin and balances the glucose level. The main part of this system is the smart phone containing the respective computer algorithms. The smart phone is connected to the CGM sensor which is again connected to the insulin pump. The CGM determines the blood glucose level and the insulin pump delivers the insulin and is controlled by CGM. The function of the Artificial Pancreas is described in simple manner. The Glucose sensor under the skin senses the amount of glucose present in blood. The sensed data is sent to the smart phone through wireless transmission. The Artificial Pancreas lead to the better life, and helps to avoid increased glucose levels because prolonged increasing of glucose in blood leads to several complications. It also avoids reduced glucose levels, because the prolonged reduction of glucose levels can lead to coma or death.

DISADVANTAGES OF EXISTING MODEL:

The main problem with the existing model of the artificial pancreas is that this system consists of two external devices which are smart phone- to display the blood sugar level and a insulin pump which contains insulin. Thus the external devices may be uncomfortable for some diabetic patients who are athelets, hardworking labours who frequently bend down at their work etc., as the device must be connected all times. There are other disadvantages which are, there is no complete cure for diabetes. If the artificial pancreas malfunction, then it may lead to serious life threats. A continuous glucose monitor measures glucose level in the tissue fluid, which does not change as quickly as the glucose level in the blood, which can lead to inappropriate dosing of insulin when the blood glucose is too high or too low.

.

III. PROPOSED SYSTEM

Imagine placing a capsule in the pancreas, and having it take care of diabetes for you, no more pin tricks, no more insulin injections and it sits there for as long as the patient needs it. The pancreas does many things but one of the most important functions is to regulate the levels of sugar in our body and it does this by secreting insulin. The capsule must have some peculiar properties such as it must be nano-porous and it must be bio-compatible. The capsule must be nanoporous as it plays a vital role in insulin delivery through those pores. The capsule is coated with any biomaterial, preferably collagen. The collagen is a structural protein found in all animals and most abundant in vertebrates. The length of a collagen fibre is 1cm and the diameter is 500nm. The capsule is filled with some amount of pancreatic beta cells which are capable of secreting the insulin. As usual, the glucose sensor is needed but in our system, the glucose sensor is placed inside the capsule instead of connecting externally.

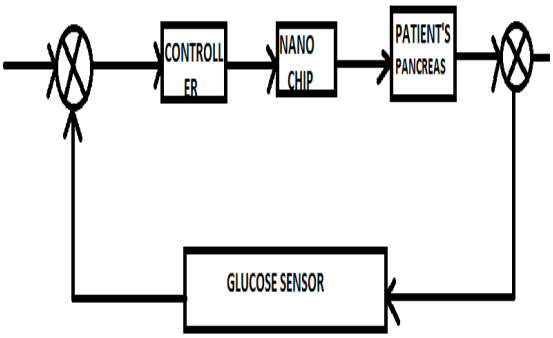

Fig 2: Block Diagram for Implantable pancreas

The chip is a microcontroller 8051, which plays a major role in controlling the amount of insulin to be delivered by the capsule containing beta cells. The features of 8051 microcontroller are it has Flash memory (program memory, programmed using MPLAB devices), SRAM (data memory), EEPROM memory (programmable at run-time), Sleep mode (power savings), Watchdog timer, various crystal or RC oscillator configurations, or an external clock.

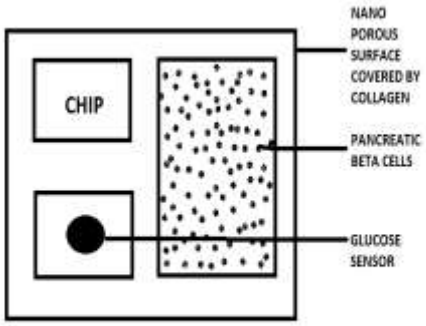

Fig 3: Systematic architecture for Block Diagram

The sensor senses the sugar level and if there exist low blood sugar level, then it reads the data to the microcontroller. The controller then induces the pancreatic cells to secrete insulin. The pancreatic cell has two channels: calcium channels and Potassium channels. The K channels are normally open and allow Potassium ions to move out. So the potential difference of -70mV is developed. When the glucose concentration outside the membrane is more, then the glucose molecules move inside the membrane and metabolism of glucose molecules takes place leading to increased ATP: ADP ratio. So the K channels close. Therefore the potential difference across the membrane becomes more positive and thus the Ca channels are open and allow the Ca ions to enter the cell. These ions cause the vesicles containing the insulin to move and fuse with the cell surfacing membrane, releasing insulin by exocytosis. In addition, the glucose level is displayed in our smart phone by developing an application, body glucose level**.**

ADVANTAGES OF IMPLANTABLE NANO-PANCREAS:

1. There are no external devices.
2. The patient need not make the decision of how much insulin to administer, as the process is fully controlled by the microcontroller 8051.
3. Efficient and is accurate.

IV. Conclusion

Implantable pancreas is the most needed application compared to artificial pancreas and it is fully non invasive. In this technique, some of the drawbacks in artificial pancreas are: No complete cure for diabetes; Artificial pancreas consists of two external devices that must always be connected; difficult for athletic patients who play sports that the device must be connected properly.

References

[1] Hoskins, Clare, et al. "In vitro and in vivo anticancer activity of a novel nano-sized formulation based on self-assembling polymers against pancreatic cancer." Pharmaceutical research 27.12 (2010): 2694-2703

[2] Huyett, Lauren M., et al. "Design and evaluation of a robust PID controller for a fully implantable artificial pancreas." Industrial & engineering chemistry research 54.42 (2015): 10311-10321

[3] Kepsutlu, Burcu, et al. "Design of bioartificial pancreas with functional micro/nano-based encapsulation of islets." Current pharmaceutical biotechnology 15.7 (2014): 590-608

[4] Banupriya, M., et al. "Remote Monitoring System For A Switchable Distribution Transformer By The Use Of Wireless ZigBee Technology." International Journal of New Trends in Electronics and Communication (IJNTEC-ISSN: 2347-7334) 1.4 (2013): 47-49

[5] Vijayalakshmi, B. "Patient monitoring system using Wireless Sensor based Mesh Network." Computing Communication & Networking Technologies (ICCCNT), 2012 Third International Conference on. IEEE, 2012

[6] Punitha, R., et al. "Adoptive parent based framework for zigbee cluster tree networks." International Journal of Engineering and Technical Research (2014): 2321-0869

[7] Kumar, C. Ram, et al. "An Energy Efficient ASIC for Wireless Body Sensor Networks in Medical Applications." (2017)

[8] Kumar, C. Ram, et al. "Improvement in Energy and Avoiding Packet Errors In TCP By Coda Mechanism."

[9] Kumar, C. Ram, et al. "Improving Throughput and Energy Efficiency by PCTAR Protocol in Wireless Sensor Network."

[10] Abirami, A., et al. "C. Ram kumar, “Enhancement of Satellite Image Resolution With Moving Objects”." IOSR Journal of Electronics and Communication Engineering (IOSRJECE) 4.6 (2013): 22-27

[11] RAMKUMAR, C., HR PRADEEP KUMAR, and S. KRISHNAPRASANTH. "EAACM: Enhanced ACK Aware Clustering Mechanism for Energy Efficient and Secure Routing in Wireless Sensor Networks."

[12] Kumar, C. Ram, et al. "Vehicle Theft Alarm And Tracking The Location Using RFID & GPS." Journal of Emerging Technology and Advanced Engineering (IJETAE) 3.12 (2013): 525-528.

[13] Kumar, C. Ram, and M. Jennie Bharathi. "Enhancing Coding Aware Routing and Handling Link Failure in WSN." Journal of Computer Applications (JCA) 4.4 (2011): 2011.

[14] Kumar, C. Ram, et al. "An Energy Efficient ASIC for Wireless Body Sensor Networks in Medical Applications." (2017).

[15] Kumar, C. Ram, S. Karthik, and N. Karthikeyan. "Fairness Aware Probabilistic Algorithm with Rate Control and Congestion Avoidance in WSN." Asian Journal of Information Technology15.11 (2016): 1851-1855.

[16] Kumar, C. Ram, S. Karthik, and N. Karthikeyan. "Fairness Aware Probabilistic Algorithm with Rate Control and Congestion Avoidance in WSN." Asian Journal of Information Technology15.11 (2016): 1851-1855