MEMS Accelerometer Based Hand Gesture Recognition of Robotic Vehicle using Smart Control

[1]Animesh Soreng, [2]Reghawan Rajkhowa, [3]Yogesh Kumar Yadav, [4]Chandralekha M

[1, 2, 3]Student, [4]Assistant Professor
Department of Electrical and Electronics Engineering,
Global Academy of Technology, Bangalore, India

***Abstract*— This paper describes hand movement using accelerometers to control a robotic vehicle. The universal control unit is in the form of wearable one, with the sensors that detects the movement and relayed to a control unit through radio Frequency to take the required actions. The receiver unit is interfaced with the computer. A Vehicle which can be controlled wirelessly with the help of hand gesture is much easier than other controlling methods. The gesture control system gives a new dimension in the world of controller. The focus of the project is to sense the hand gesture wirelessly.**

***Index Terms*—Graphical User Interface, gesture, accelerometer**

1. INTRODUCTION

Recently, strong efforts have been carried out to develop an intelligent and natural interface between users and computer based systems based on human gesture. Gestures provide an intuitive interface to both human and computer. Thus, such gesture based interfaces can not only substitute the common interface device, but can also be exploited to extend their functionality.

1.1 Robot

A robot is usually electromechanical machine that can perform tasks automatically. Some robot requires some degree of guidance, which may be done using a remote control or with a computer interface. Robots can be autonomous, semi-autonomous or remotely controlled. Robots have evolved so much and are capable of mimicking humans that they seem to have mind of their own.

1.2 Human Machine Interaction

An important aspect of a successful robotic system is the Human-Machine interaction. In the early years the only way to communicate with a robot was to program which required extensive hard work, With the development in science and robotics, gesture based recognition came into life, Gestures originate from any bodily motion or state but commonly originate from the face or hand. Gesture recognition can be considered as a way for computer to understand human body language. This has minimized the need for text interfaces and GUIs (Graphical User Interface).

1.3 Gesture

A gesture is an action that has to be seen by someone else and has to convey some piece of information. Gesture is usually considered as a movement of part of the body, especially a hand or the head to express an idea or meaning.

1.4 Objective

I. Our objective of the project is to make this device simple as well as cheap so that it could be mass produced and can be used for a number of purposes such as Man-Machine interface using hand gestures and control of mechanical systems.

1.5 Literature Survey

The emergence of service robots in early 90's (Helpmate Robots and Robo-Caddy) followed by the development of natural language interface through keyboard has been given by Torrance in 1994. Speech recognition evolved as an upgradation of the past work to communicate with machines but it lacked the standardization of commands due to varying languages, pitch and accent of different users. Hence, researchers proposed vision-based interface that included gesture recognition through camera to provide geometrical information to the robots.

They developed mobile robot systems that were instructed through arm positions but those robot systems couldn't recognize gestures defined through specific temporal patterns. Other limitation faced by the cameras was the poor illuminations at night and in foggy weather. Motion technology facilitates humans to interact with machines naturally without any interventions caused by the drawbacks of mechanical devices. Using the concept of gesture recognition, it is possible to move a robot accordingly. Gyroscope and Accelerometers are the main technologies used for human machine interaction that offer very reasonable motion sensitivity, hence, are used in large array of different applications. A lot of work has been done on motion technology using accelerometers.

2. SYSTEM COMPONENTS

2.1 RESOURCES REQUIRED

The main hardware components of this project are:

- Accelerometer
- Motors driver
- DC Motor
- Power Supply
- IR Sensor
- LDR Relay

2.2 ACCELEROMETER

2.2.1 Types of Accelerometer:-

- Bulk micro machined capacitive
- Bulk micro machined piezoelectric resistive
- Capacitive spring mass base
- DC response
- Electromechanical servo (Servo Force Balance)
- High gravity
- High temperature
- Laser accelerometer
- Low frequency
- Magnetic induction
- Modally tuned impact hammers
- Null-balance
- MEMS Accelerometer

2.2.2 MEMS Accelerometer over other accelerometers

Although some products like pressure sensors have been produced for 30 years, MEMS industry in many aspects is still a young industry. MEMS will undoubtedly invade more and more consumer products. Size of MEMS is getting smaller, frequency response and sense ranges are getting wider. MEMS are more and more reliable and their sensitivity better every day. Prices of MEMS accelerometers and other MEMS devices aren't excessive, but they still have to drop a lot for massive consumption. Standardization of production, testing and packaging MEMS would certainly do a big part at it. The relatively long and expensive development cycle for a MEMS component is a hurdle that needs to be lowered and also less expensive micro-fabrication method than photolithography has to be pursued.

Figure 2.1: Accelerometer (ADXL335).

Features:

- 3-axis sensing
- Small, low profile package4 mm × 4 mm × 1.45 mm LFCSP
- Low power : 350 µA (typical)
- Single-supply operation: 1.8 V to 3.6 V
- 10,000 *g* shock survival
- Excellent temperature stability
- BW adjustment with a single capacitor per axis
- RoHS / WEEE lead-free compliant

2.2.3 GENERAL DESCRIPTION OF ADXL335

The ADXL335 is a small, thin, low power, complete 3-axis accelerometer with signal conditioned voltage outputs. The product measures acceleration with a minimum full-scale range of ±3 *g*. It can measure the static acceleration of gravity in tilt-sensing applications, as well as dynamic acceleration resulting from motion, shock, or vibration.

The user selects the bandwidth of the accelerometer using the CX, CY, and CZ capacitors at the XOUT, YOUT, and ZOUT pins. Bandwidths can be selected to suit the application, with a range of 0.5 Hz to 1600 Hz for the X and Y axes, and a range of 0.5 Hz to 550 Hz for the Z axis. The ADXL335 is available in a small, low profile, 4 mm × 4 mm × 1.45 mm, 16-lead, plastic lead frame chip scale package (LFCSP_LQ).

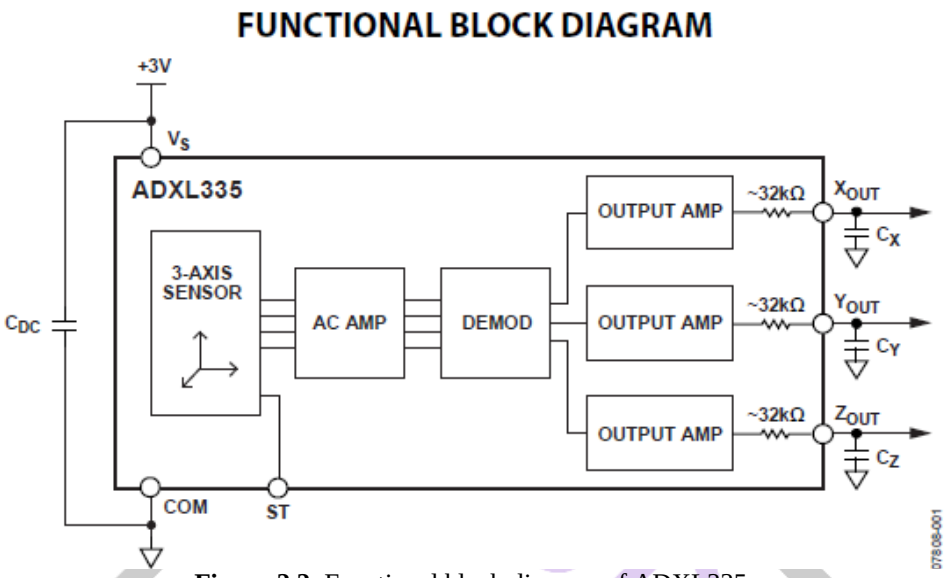

Figure 2.2: Functional block diagram of ADXL335.

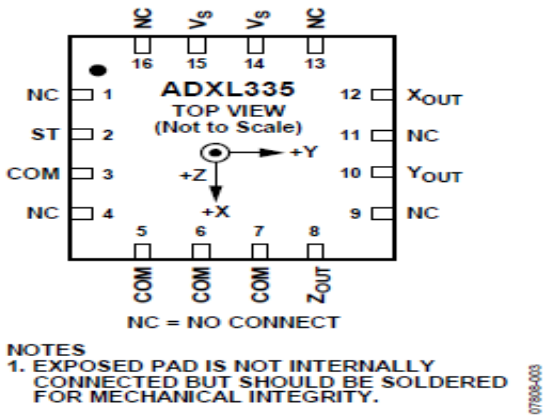

Figure 2.3: Pin configurations of ADXL335.

2.2.4 Operation of ADXL335:

The ADXL335 is a complete 3-axis acceleration measurement system. The ADXL335 has a measurement range of ±3 *g* minimum. It contains a polysilicon surface-micro machined sensor and signal conditioning circuitry to implement open-loop acceleration measurement architecture. The output signals are analog voltages that are proportional to acceleration. The accelerometer can measure the static acceleration of gravity in tilt-sensing applications as well as dynamic acceleration resulting from motion, shock, or vibration.

The sensor is a polysilicon surface-micro machined structure built on top of a silicon wafer. Polysilicon springs suspend the structure over the surface of the wafer and provide a resistance against acceleration forces. Deflection of the structure is measured using a differential capacitor that consists of independent fixed plates and plates attached to the moving mass. The fixed plates are driven by 180° out-of-phase square waves. Acceleration deflects the moving mass and unbalances the differential capacitor resulting in a sensor output whose amplitude is proportional to acceleration. Phase-sensitive demodulation techniques are then used to determine the magnitude and direction of the acceleration.

The demodulator output is amplified and brought off-chip through a 32 kΩ resistor. The user then sets the signal bandwidth of the device by adding a capacitor. This filtering improves measurement resolution and helps prevent aliasing.

The ADXL335 uses a single structure for sensing the X, Y, and Z axes. As a result, the three axes' sense directions are highly orthogonal and have little cross-axis sensitivity. Mechanical misalignment of the sensor die to the package is the chief source of cross-axis sensitivity. Mechanical misalignment can, of course, be calibrated out at the system level.

2.2.5 Performance:

Rather than using additional temperature compensation circuitry, innovative design techniques ensure that high performance is built in to the ADXL335. As a result, there is no quantization error or non monotonic behavior, and temperature hysteresis is very low (typically less than 3 m*g* over the −25°C to +70°C temperature range).

In this project the accelerometer is placed on the hand of the individual (physically challenged / aged) and controlling using hand movements is as shown below

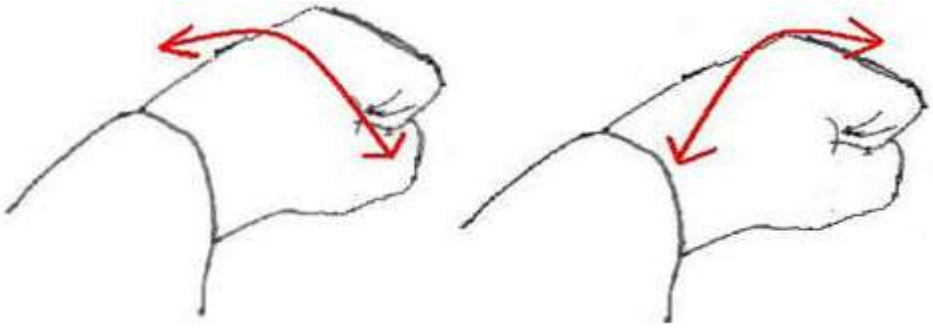

Figure 2.4: A view of hand movement for controlling (Right, Left, Forward, and Backward)

2.2.6 Applications

Accelerometers are real workhorses in the sensor world because they can sense such a wide range of motion. They're used in the latest Apple Power books (and other laptops) to detect when the computer's suddenly moved or tipped, so the hard drive can be locked up during movement. They're used in cameras, to control image stabilization functions. They're used in pedometers, gait meters, and other exercise and physical therapy devices. They're used in gaming controls to generate tilt data. They're used in automobiles, to control airbag release when there's a sudden stop. There are countless other applications for them.

2.3 MOTOR DRIVER L293D

Figure 2.5: L293D Motor Driver

Features of L293D:

- 600mA Output current capability per channel
- 1.2A Peak output current (non repetitive) per channel
- Enable facility
- Over temperature protection
- Logical —0‖input voltage up to 1.5 v
- High noise immunity
- Internal clamp diodes

The L293 and L293D are quadruple high-current half-H drivers. The L293 is designed to provide bidirectional drive currents of up to 1 A at voltages from 4.5 V to 36 V. The L293D is designed to provide bidirectional drive currents of up to 600-mA at voltages from 4.5 V to 36 V. Both devices are designed to drive inductive loads such as relays, solenoids, dc and bipolar stepping motors, as well as other high-current/high-voltage loads in positive-supply applications.

All inputs are TTL compatible. Each output is a complete totem-pole drive circuit, with a Darlington transistor sink and a pseudo-Darlington source. Drivers are enabled in pairs, with drivers 1 and 2 enabled by 1,2EN and drivers 3 and 4 enabled by 3,4EN.When an enable input is high, the associated drivers are enabled and their outputs are active and in phase with their inputs. When the enable input is low, those drivers are disabled and their outputs are off and in the high-impedance state. With the proper data inputs, each pair of drivers forms a full-H (or bridge) reversible drive suitable for solenoid or motor applications. On the L293, external high-speed output clamp diodes should be used for inductive transient suppression. A VCC1 terminal, separate from VCC2, is provided for the logic inputs to minimize device power dissipation. The L293and L293D is characterized for operation from 0°C to 70°C.

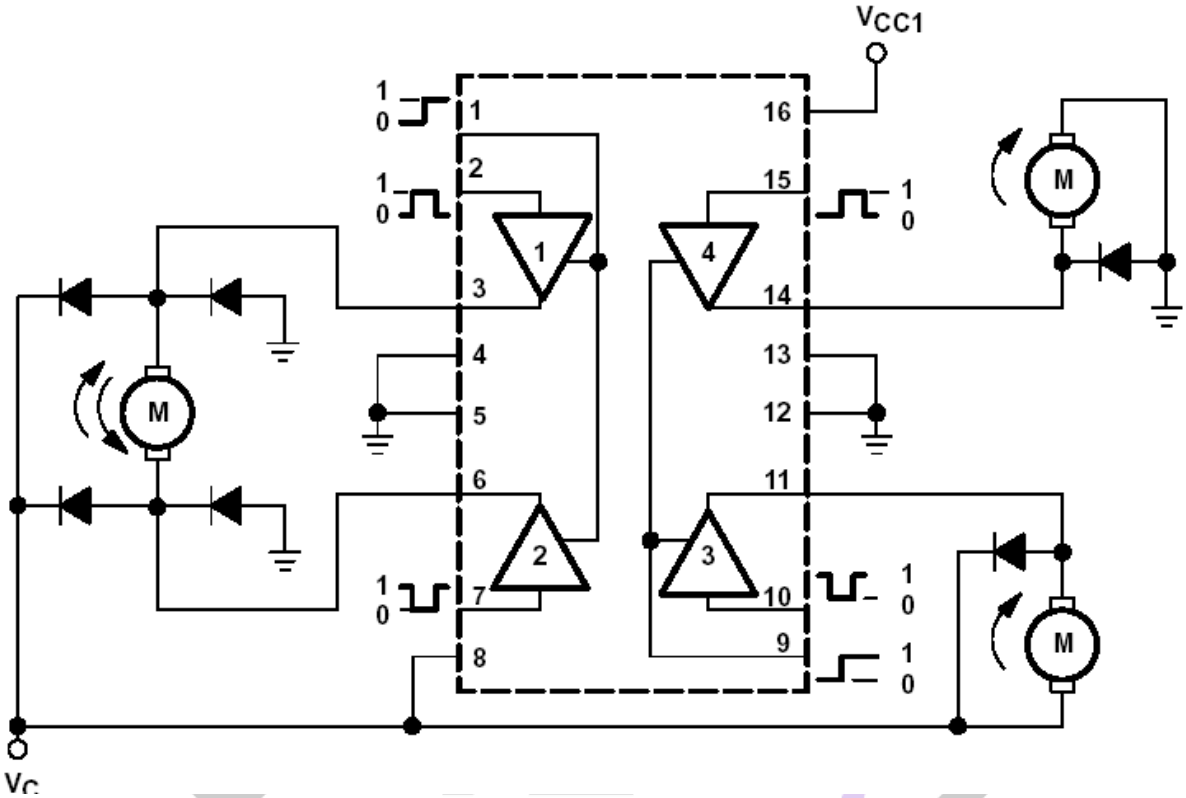

Figure 2.6: Internal structure of L293D.

2.4 DC MOTOR

Figure 2.7: DC Motor

Motor Basics

An electric motor is a device using electrical energy to produce mechanical energy, nearly always by the interaction of magnetic fields and current-carrying conductors. The reverse process that of using mechanical energy to produce electrical energy is accomplished by a generator or dynamo. Traction motors used on vehicles often perform both tasks.

Electric motors are found in myriad uses such as industrial fans, blowers and pumps, machine tools, household appliances, power tools, and computer disk drives, among many other applications. Electric motors may be operated by direct current from a battery in a portable device or motor vehicle, or from alternating current from a central electrical distribution grid. The smallest motors may be found in electric wristwatches. Medium-size motors of highly standardized dimensions and characteristics provide convenient mechanical power for industrial uses. The very largest electric motors are used for propulsion of large ships, and for such purposes as pipeline compressors, with ratings in the thousands of kilowatts. Electric motors may be classified by the source of electric power, by their internal construction, and by application.

The physical principle of production of mechanical force by the interaction of an electric current and a magnetic field was known as early as 1821. Electric motors of increasing efficiency were constructed throughout the 19th century, but commercial exploitation of electric motors on a large scale required efficient electrical generators and electrical distribution networks.

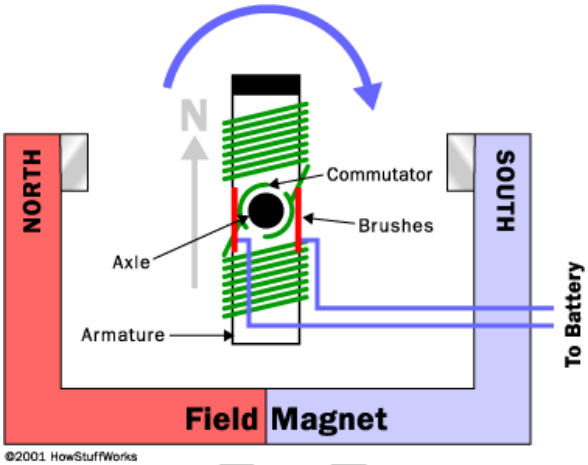

Figure 2.8: DC motor structure

Horsepower at any given operating point can be calculated with the following equation:

$$HP = \frac{\text{Torque} \cdot \text{Speed}}{5250}$$

Where:
Torque is measured in Lb-Ft
Speed is measured in RPM.

2.5 RELAY

Relay basics

A simple electromagnetic relay, such as the one taken from a car in the first picture, is an adaptation of an electromagnet. It consists of a coil of wire surrounding a soft iron core, an iron yoke, which provides a low reluctance path for magnetic flux, a moveable iron armature, and a set, or sets, of contacts; two in the relay pictured.

The armature is hinged to the yoke and mechanically linked to a moving contact or contacts. It is held in place by a spring so that when the relay is de-energized there is an air gap in the magnetic circuit. In this condition, one of the two sets of contacts in the relay pictured is closed, and the other set is open. Other relays may have more or fewer sets of contacts depending on their function. The relay in the picture also has a wire connecting the armature to the yoke. This ensures continuity of the circuit between the moving contacts on the armature, and the circuit track on the Printed Circuit Board (PCB)

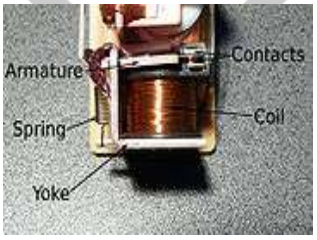

Figure 2.9: A simple electromagnetic relay

When an electric current is passed through the coil, the resulting magnetic field attracts the armature and the consequent movement of the movable contact or contacts either makes or breaks a connection with a fixed contact. If the set of contacts was closed when the relay was de-energized, then the movement opens the contacts and breaks the connection, and vice versa if the contacts were open.

When the current to the coil is switched off, the armature is returned by a force, approximately half as strong as the magnetic force, to its relaxed position. Usually this force is provided by a spring, but gravity is also used commonly in industrial motor starters. Most relays are manufactured to operate quickly. In a low voltage application, this is to reduce noise. In a high voltage or high current application, this is to reduce arcing.

If the coil is energized with DC, a diode is frequently installed across the coil, to dissipate the energy from the collapsing magnetic field at deactivation, which would otherwise generate a voltage spike dangerous to circuit components. Some automotive relays already include that diode inside the relay case. Alternatively a contact protection network, consisting of a capacitor and resistor in series, may absorb the surge. If the coil is designed to be energized with AC, a small copper ring can be crimped to the end of the solenoid. This "shading ring" creates a small out-of-phase current, which increases the minimum pull on the armature during the AC cycle.

2.6 LDR (Light Dependent Resistances)

Light-dependent resistances (LDR) are cheap light sensors. A less known light detector is the electrets microphone, whose electrets membrane functions as a perfect absorber, but only detects pulsed light. The aim of this study was to analyze the use of a LDR and an electrets microphone as a light sensor in an optical spectroscopy system using pulsed light.

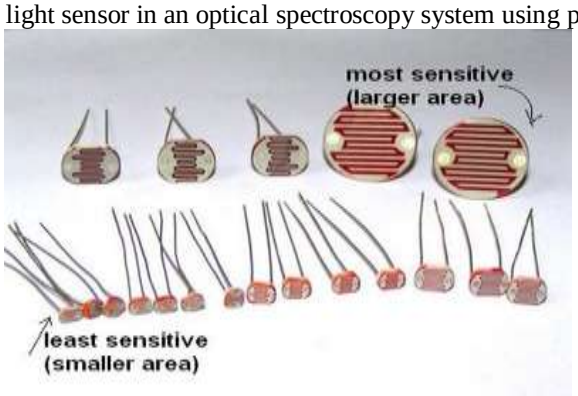

Figure 2.10: Different types of LDR

A photo acoustic spectroscopy setup was used, substituting the photo acoustic chamber by the light sensor proposed. The absorption spectra of two different liquids were analyzed. In this project it is used to switch on the lights in dark and less illuminated areas.

2.7 Infrared Sensor

2.7.1 IR Sensor

Figure 2.11: IR sensor.

Features

- Range of around 25 cm
- Input Voltage: 5V DC
- Comes with an easy to use digital output
- Can be used for wireless communication and sensing IR remote signals
- Uses the popular TSOP1738 for sensing IR signals and works on the 38 kHz frequency
- Sensor comes with ambient light protection
- The sensor a hole of 3mm diameter for easy mounting.

2.7.2 General Description of IR Sensor

The IR Sensor-Single is a general purpose proximity sensor. Here we use it for collision detection. The module consists of an IR emitter and IR receiver pair. The high precision IR receiver always detects a IR signal. The module consists of 358 comparator IC. The output of sensor is high whenever it IR frequency and low otherwise. The on-board LED indicator helps user to check status of the sensor without using any additional hardware. The power consumption of this module is low. It gives a digital output.

PIN NO.	CONNECTION	DISCRIPTION
1	Output	Digital O/P(High or Low)
2	Vcc	Connected to circuit supply
3	Ground	Connected to circuit ground

Table 2.1:-Pin configuration of IR sensor

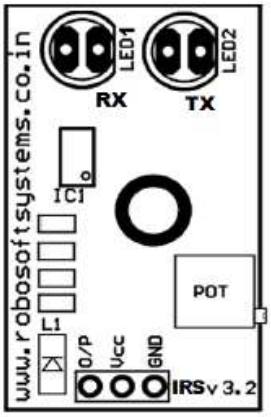

Figure 2.12: Block diagram of IR sensor.

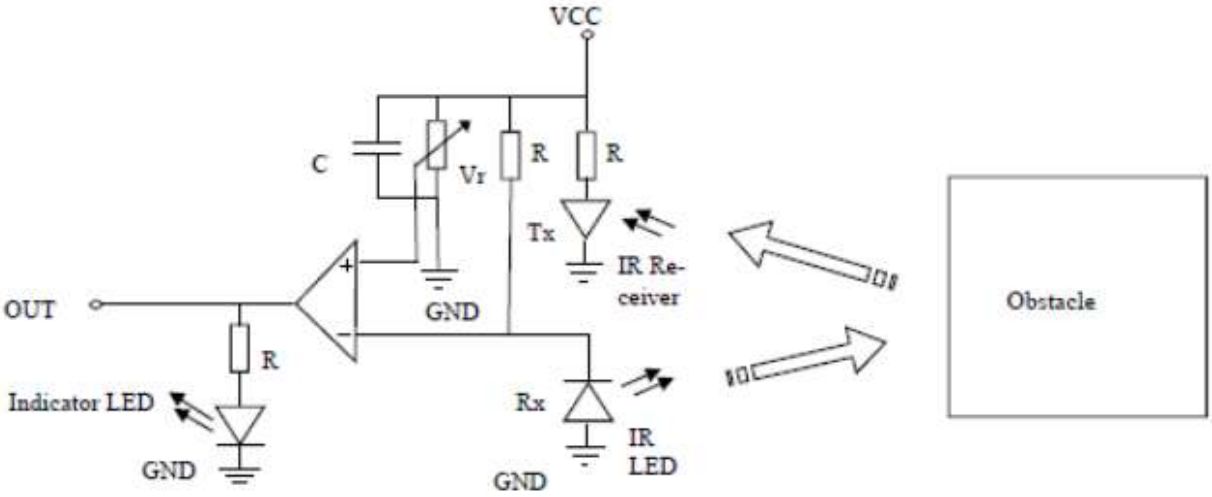

Figure 2.13: Functional Block Diagram of IR sensor

The sensitivity of the IR Sensor is tuned using the potentiometer. The potentiometer is tunable in both the directions. Initially tune the potentiometer in clockwise direction such that the Indicator LED starts glowing. Once that is achieved, turn the potentiometer just enough in anti-clockwise direction to turn off the Indicator LED. At this point
the sensitivity of the receiver is maximum. Thus, its sensing distance is maximum at this point. If the sensing distance (i.e., Sensitivity) of the receiver is needed to be reduced, then one can tune the potentiometer in the anti-clockwise direction from this point. Further, if the orientation of both Tx and Rx LED's is parallel to each other, such that both are facing outwards, then their sensitivity is maximum. If they are moved away from each other, such that they are inclined to each other at their soldered end, then their sensitivity reduces.

Tuned sensitivity of the sensors is limited to the surroundings. Once tuned for a particular surrounding, they will work perfectly until the IR illumination conditions of that region nearly constant. For example, if the potentiometer is tuned inside room/building for maximum sensitivity and then taken out in open sunlight, its will require retuning, since sun's rays also contain Infrared (IR) frequencies, thus acting as a IR source (transmitter). This will disturb the receiver's sensing capacity. Hence it needs to be retuned to work perfectly in the new surroundings. The output of IR receiver goes low when it receives IR signal. Hence the output pin is

normally low because, though the IR LED is continuously transmitting, due to no obstacle, nothing is reflected back to the IR receiver. The indication LED is off. When an obstacle is encountered, the output of IR receiver goes low, IR signal is reflected from the obstacle surface. This drives the output of the comparator low. This output is connected to the cathode of the LED, which then turns ON.

2.8 LED

A light-emitting diode (LED) is a semiconductor light source. LED's are used as indicator lamps in many devices, and are increasingly used for lighting. Introduced as a practical electronic component in 1962, early LED's emitted low-intensity red light, but modern versions are available across the visible, ultraviolet and infrared wavelengths, with very high brightness.

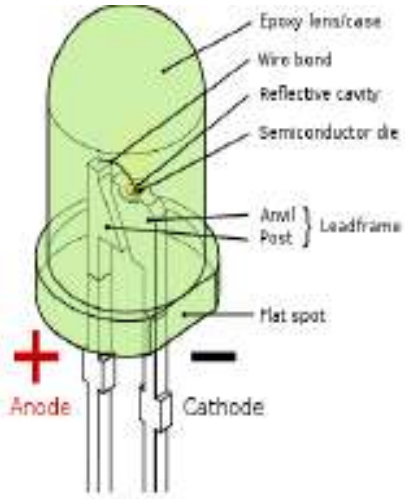

Figure 2.14: Cross-sectional view of an LED

LED lights have a variety of advantages over other light sources:

- High-levels of brightness and intensity
- High-efficiency
- Low-voltage and current requirements
- Low radiated heat
- High reliability (resistant to shock and vibration)
- No UV Rays
- Long source life
- Can be easily controlled and programmed

Applications of LED fall into three major categories:

- Visual signal application where the light goes more or less directly from the LED to the human eye, to convey a message or meaning.
- Illumination where LED light is reflected from object to give visual response of these objects.
- Generate light for measuring and interacting with processes that do not involve the human visual system.

2.9 RF Module (Transmitter & Receiver)

The RF module, as the name suggests, operates at Radio Frequency. The corresponding frequency range varies between 30 kHz & 300 GHz. In this RF system, the digital data is represented as variations in the amplitude of carrier wave. This kind of modulation is known as Amplitude Shift Keying (ASK).

Transmission through RF is better than IR (infrared) because of many reasons. Firstly, signals through RF can travel through larger distances making it suitable for long range applications. Also, while IR mostly operates in line-of-sight mode, RF signals can travel even when there is an obstruction between transmitter & receiver. Next, RF transmission is more strong and reliable than IR transmission. RF communication uses a specific frequency unlike IR signals which are affected by other IR emitting sources.

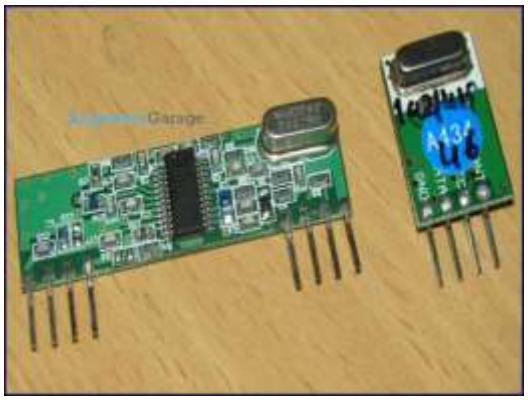

Figure 2.15:-RF Module

This RF module comprises of an RF Transmitter and an RF Receiver. The transmitter/receiver (Tx/Rx) pair operates at a frequency of 434 MHz An RF transmitter receives serial data and transmits it wirelessly through RF through its antenna connected at pin4. The transmission occurs at the rate of 1Kbps - 10Kbps.The transmitted data is received by an RF receiver operating at the same frequency as that of the transmitter. The RF module is often used along with a pair of encoder/decoder. The encoder is used for encoding parallel data for transmission feed while reception is decoded by a decoder. HT12E-HT12D, HT640-HT648, etc. are some commonly used encoder/decoder pair ICs.

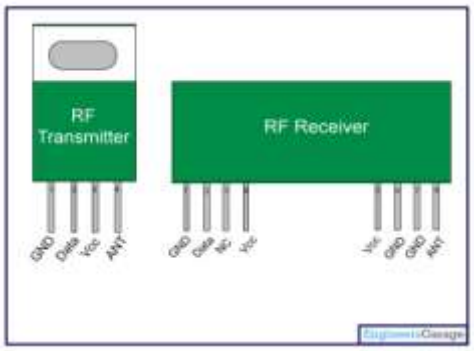

Figure 2.16: Pin Diagram of RF Transmitter and Receiver

Pin Description:

RF Transmitter

Pin No	Function	Name
1	Ground (0V)	Ground
2	Serial data input pin	Data
3	Supply voltage; 5V	Vcc
4	Antenna output pin	ANT

RF Receiver

Pin No	Function	Name
1	Ground (0V)	Ground
2	Serial data output pin	Data
3	Linear output pin; not connected	NC
4	Supply voltage; 5V	Vcc
5	Supply voltage; 5V	Vcc
6	Ground (0V)	Ground
7	Ground (0V)	Ground
8	Antenna input pin	ANT

Table 3.1:- Pin description of RF Module

2.10 Microcontroller (ATMEGA328)

➢ **Introduction to Microcontroller- ATMEGA328**

Figure 2.17: ATMEGA328

Features:

High Performance, Low Power Atmel®AVR® 8-Bit Microcontroller Family
- ✓ Advanced RISC Architecture
- ✓ 131 Powerful Instructions – Most Single Clock Cycle Execution
- ✓ 32 x 8 General Purpose Working Registers
- ✓ Fully Static Operation
- ✓ Up to 20 MIPS Throughput at 20MHz
- ✓ On-chip 2-cycle Multiplier

High Endurance Non-volatile Memory Segments
- ✓ 4/8/16/32KBytes of In-System Self-Programmable Flash program memory
- ✓ 256/512/512/1KBytes EEPROM
- ✓ 512/1K/1K/2KBytes Internal SRAM
- ✓ Write/Erase Cycles: 10,000 Flash/100,000 EEPROM
- ✓ Data retention: 20 years at 85□C/100 years at 25□C
- ✓ Optional Boot Code Section with Independent Lock Bits

In-System Programming by On-chip Boot Program

True Read-While-Write Operation
- ✓ Programming Lock for Software Security

Atmel® QTouch® library support
- ✓ Capacitive touch buttons, sliders and wheels
- ✓ QTouch and QMatrix® acquisition
- ✓ Up to 64 sense channels

Peripheral Features
- ✓ Two 8-bit Timer/Counters with Separate Prescaler and Compare Mode
- ✓ One 16-bit Timer/Counter with Separate Prescaler, Compare Mode, and

Capture Mode
- ✓ Real Time Counter with Separate Oscillator
- ✓ Six PWM Channels
- ✓ 8-channel 10-bit ADC in TQFP and QFN/MLF package

Temperature Measurement
- ✓ 6-channel 10-bit ADC in PDIP Package

Temperature Measurement
- ✓ Programmable Serial USART
- ✓ Master/Slave SPI Serial Interface
- ✓ Byte-oriented 2-wire Serial Interface (Philips I2C compatible)
- ✓ Programmable Watchdog Timer with Separate On-chip Oscillator
- ✓ On-chip Analog Comparator
- ✓ Interrupt and Wake-up on Pin Change

Special Microcontroller Features
- ✓ Power-on Reset and Programmable Brown-out Detection
- ✓ Internal Calibrated Oscillator
- ✓ External and Internal Interrupt Sources
- ✓ Six Sleep Modes: Idle, ADC Noise Reduction, Power-save, Power-down, Standby, and Extended Standby

I/O and Packages
✓ 23 Programmable I/O Lines
✓ 28-pin PDIP, 32-lead TQFP, 28-pad QFN/MLF and 32-pad QFN/MLF
Operating Voltage:1.8 - 5.5V
Temperature Range: -40□C to 85□C
Speed Grade: 0 - 4MHz@1.8 - 5.5V, 0 - 10MHz@2.7 - 5.5.V, 0 - 20MHz @ 4.5 - 5.5V
Power Consumption at 1MHz, 1.8V, 25□C
Active Mode: 0.2mA, Power-down Mode: 0.1µA, Power-save Mode: 0.

The Atmel 8-bitAVRRISC-based microcontroller combines 32 KB ISPflash memory with read-while-write capabilities, 1 KB EEPROM, 2 KB SRAM, 23 general purpose I/O lines, 32 general purpose working registers, three flexible timer/counters with compare modes, internal and external interrupts, serial programmable USART, a byte-oriented 2-wire serial interface, SPI serial port, 6-channel 10-bit A/D converter (8-channels in TQFP and QFN/MLF packages), programmable watchdog timer with internal oscillator, and five software selectable power saving modes. The device operates between 1.8-5.5 volts. The device achieves throughputs approaching 1 MIPS per MHz.

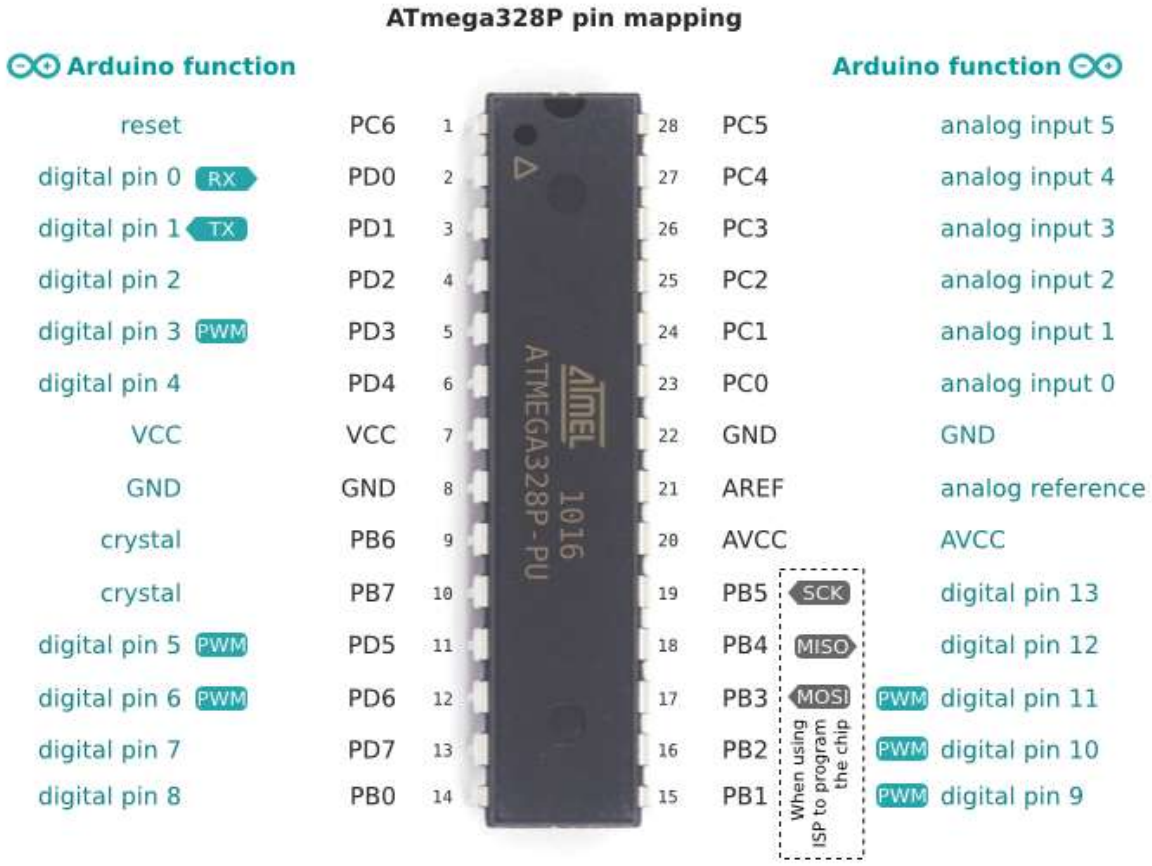

Figure 2.18: Pin Configuration of ATMEGA328

3. SOFTWARE REQUIREMENT

The Uno is a microcontroller board based on the ATmega328P. It has 14 digital input/output pins (of which 6 can be used as PWM outputs), 6 analog inputs, a 16 MHz quartz crystal, a USB connection, a power jack, an ICSP header and a reset button. It contains everything needed to support the microcontroller; simply connect it to a computer with a USB cable or power it with a AC-to-DC adapter or battery to get started. We can tinker with your UNO without worrying too much about doing something wrong, worst case scenario you can replace the chip for a few dollars and start over again.
"Uno" means one in Italian and was chosen to mark the release of Arduino Software (IDE) 1.0. The Uno board and version 1.0 of Arduino Software (IDE) were the reference versions of Arduino, now evolved to newer releases. The Uno board is the first in a series of USB Arduino boards, and the reference model for the Arduino platform.

Programming:
The Uno can be programmed with the Arduino Software (IDE). Select "Arduino/Genuino Uno" from the Tools > Board menu (according to the microcontroller on your board). The ATmega328 on the Uno comes preprogrammed with a boot loader that

allows you to upload new code to it without the use of an external hardware programmer. It communicates using the original STK500 protocol (reference, C header files). We can also bypass the boot loader and program the microcontroller through the ICSP (In-Circuit Serial Programming) header using Arduino ISP or similar. The Arduino IDE sketch can be seen below with the steps to be followed for dumping the code in microcontroller ATMEGA328P.

STEP 1:- Open Arduino IDE Sketch

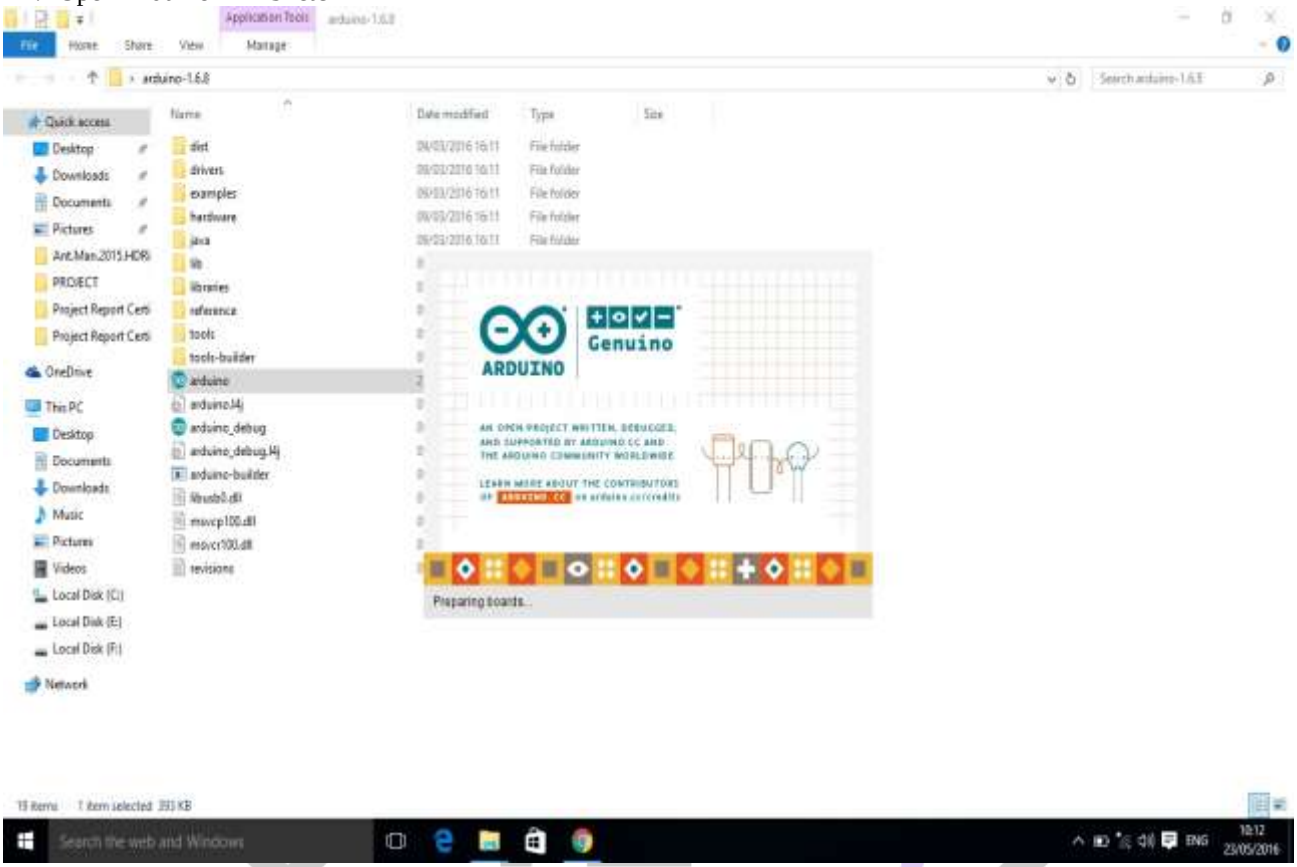

STEP 2:-Type code

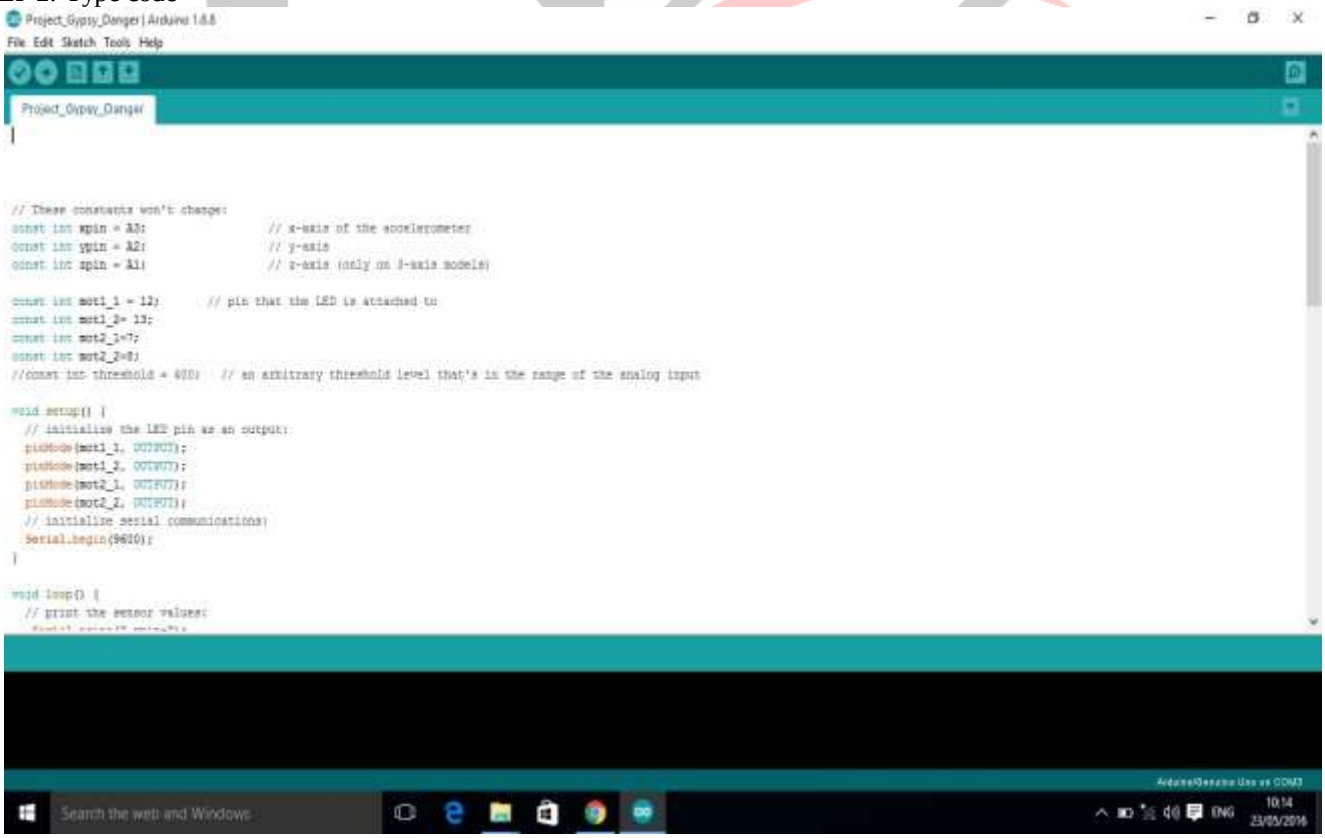

STEP 3:- Select Arduino board and COM port

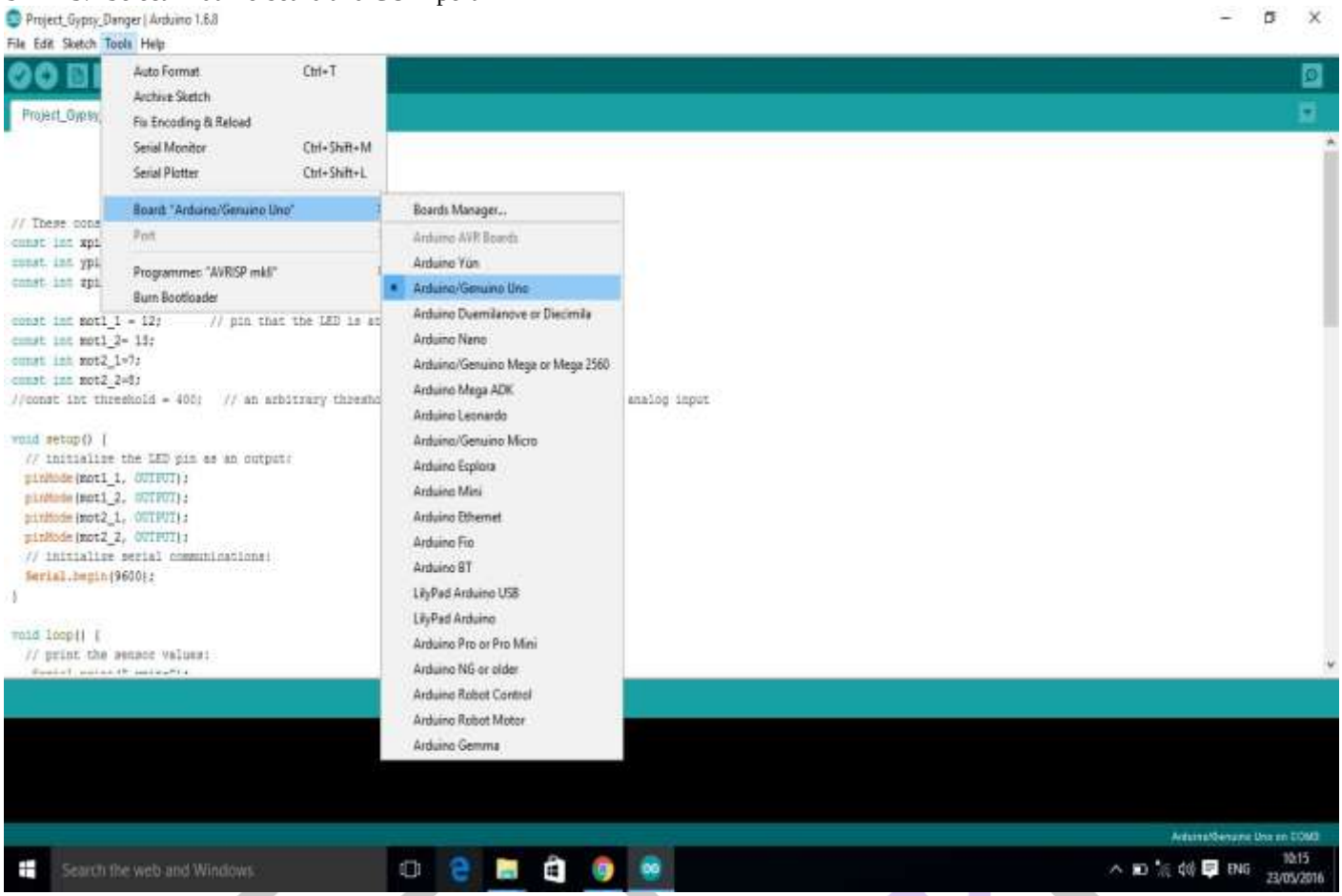

STEP 4:- Compile/Upload code in board

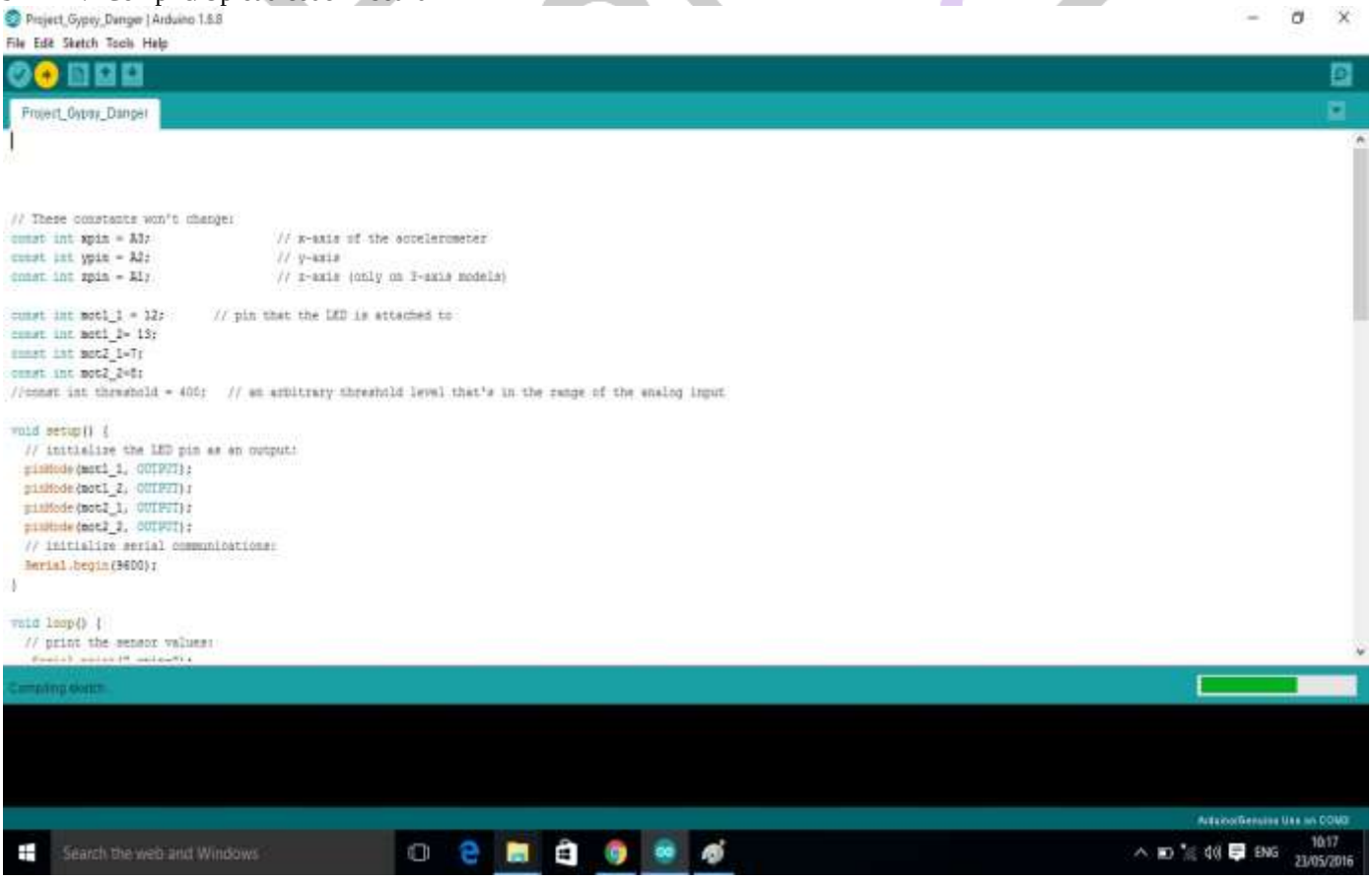

Figure 3.1:- Screenshots of IDE sketch

The ATmega16U2 (or 8U2 in the rev1 and rev2 boards) firmware source code is available in the Arduino repository. The ATmega16U2/8U2 is loaded with a DFU boot loader, which can be activated by:

- On Rev1 boards: connecting the solder jumper on the back of the board (near the map of Italy) .On Rev2 or later boards: there is a resistor that pulling the 8U2/16U2 HWB line to ground, making it easier to put into DFU mode.

4. INTEGRETED SYSTEM

4.1 Main Block Diagram

4.1.1 Transmitter side

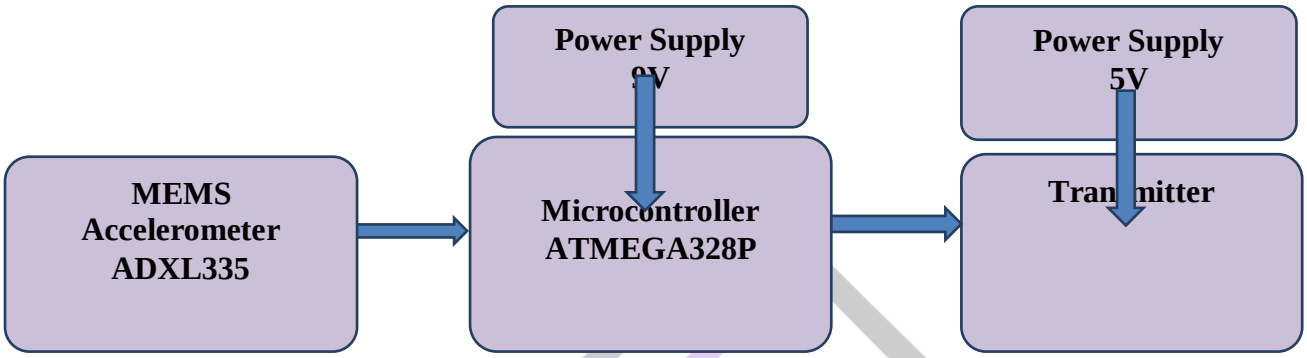

Figure 4.1: Gesture controlled robot block diagram (Transmitter Part)

The Transmitter side consists of the ADXL335 accelerometer, the ATMEGA28P microcontroller and transmitter circuit of the RF module. The microcontroller and the transmitter are given power from two different sources.

The analog output of the accelerometer is given to the microcontroller. The microcontroller has an inbuilt ADC converter which converts the analog inputs from the accelerometer to the microcontroller into digital outputs for the microcontroller. These digital outputs from the microcontroller are given to the transmitter for RF transmission.

4.1.2 Receiver side

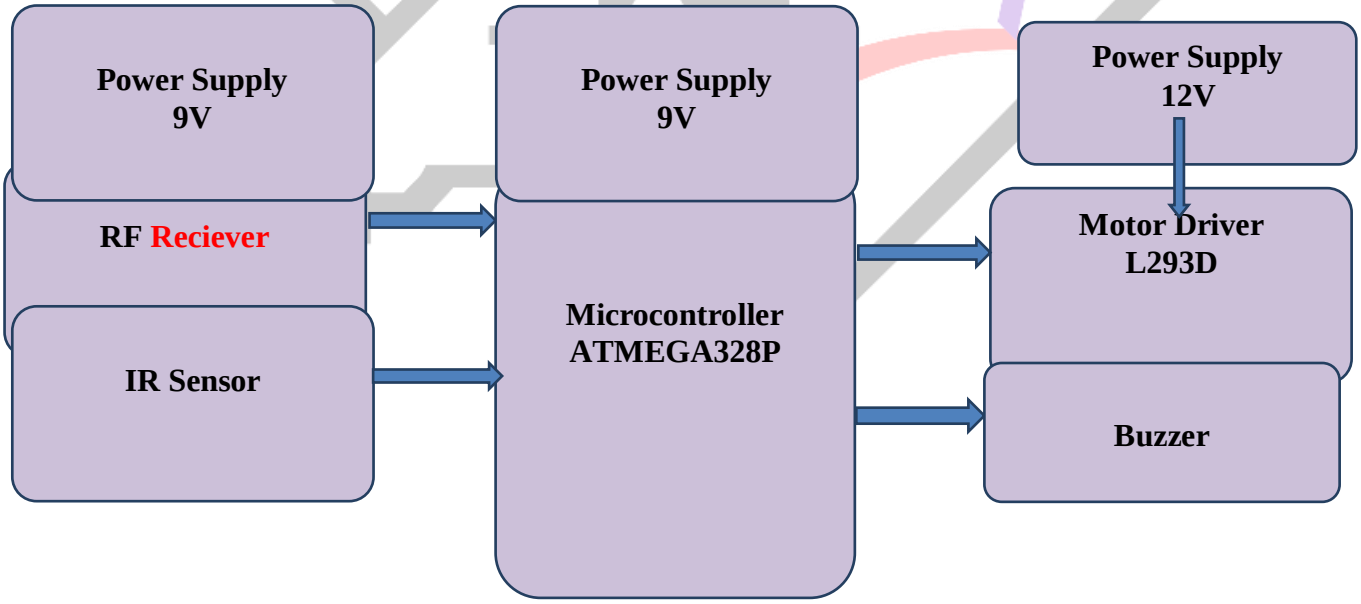

Figure 4.2: Gesture controlled robot block diagram (Receiver Part)

The receiver part consists of the motor driver, the IR sensor, the receiver circuit of the RF module and the ATMEGA328P microcontroller. The signals transmitted from the transmitter are received by the receiver. The output of the receiver is given to the microcontroller. The output of the microcontroller is given to the motor driver. The motor driver is controlled according to the conditions in the microcontroller and the desired rotation of the wheels is obtained. The input from the IR sensor is given to the microcontroller and the output is given to a buzzer.

4.2 Circuit Diagram

4.2.1 Transmitterside circuit diagram

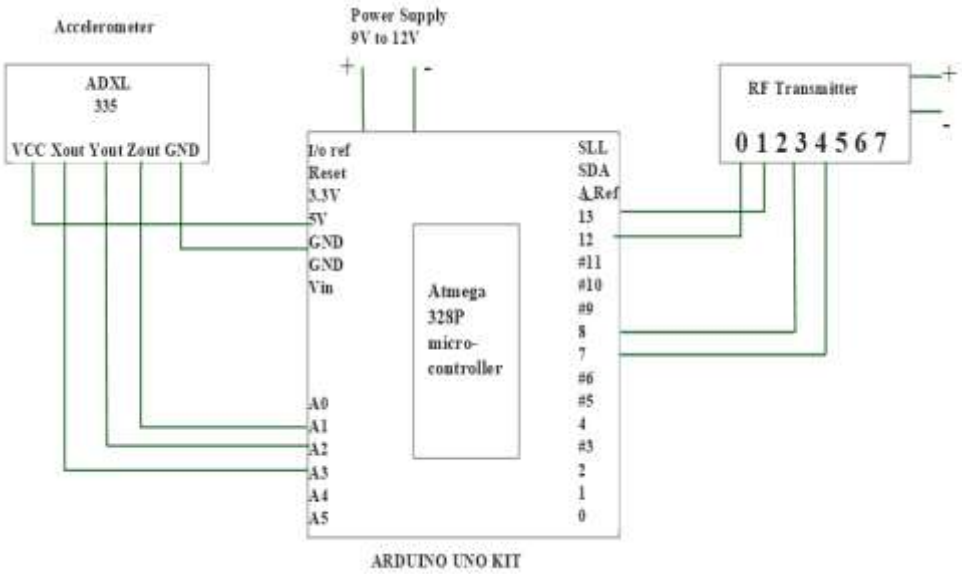

Figure 4.3: Circuit of Transmitter Side

The outputs from the Accelerometer from pins Xout, Yout and Zout are given to the analog inputs of the microcontroller that is A1, A2 and A3 pins. The Vcc and Gnd pins of the accelerometer are connected to the Vcc and Gnd pins of the microcontroller respectively. The microcontroller is given power supply from a 9v battery. The ATMEGA328P microcontroller has an inbuilt ADC converter. So the digital outputs are taken directly from the pins 7, 8, 12 and 13and are given to the inputs of the RF transmitter pins 0, 1, 3 and 4 respectively. The transmitter is given power supply from a separate 9v battery.

4.2.2 Receiver side circuit diagram

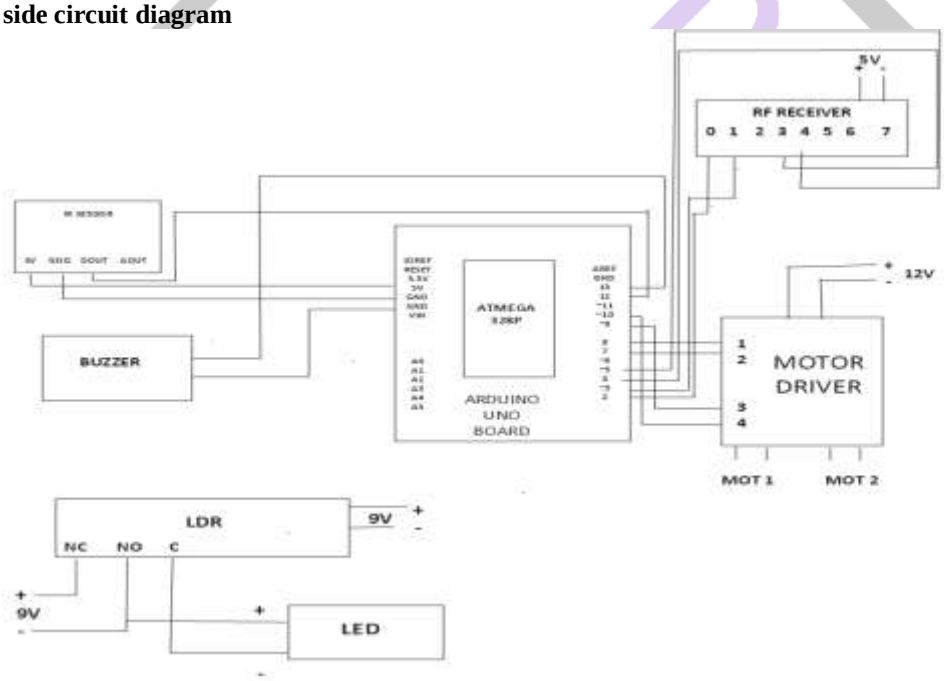

Figure 4.4: Circuit diagram of Receiver side

The accelerometer outputs are transmitted wirelessly by the RF module and are received by the receiver on the robotic vehicle. The outputs are taken from pins 0, 1, 3 and 4 from the receiver circuit and are given as inputs to the microcontroller pins2, 3, 4 and 5 respectively. The output from the microcontroller from pins 7, 8, 9 and 10 are given as inputs to the motor driver pins 1, 2, 3 and 4.

The microcontroller, motor driver and the receiver are given power from a 12v supply. The 5v and Gnd pins of the IR sensor are given to the 5v and Gnd pins of the microcontroller. The Dout pin of the IR sensor is given to the digital output pin 12 of the microcontroller. The negative and positive of the buzzer is given to the Gnd and pin 12 of the microcontroller.

4.3 Working Model

A prototype is implemented with a small robotic vehicle and 300 rpm motors are used to move the vehicle. The vehicle is fixed with two DC motors. Two motors at the rear are connected to the motor driver. The motor driver is given a supply of 12V.

The transmitter part consists of an accelerometer, microcontroller and RF Module transmitter circuit. These components are placed on a hand glove for gesture controls. The analog input from the accelerometer is converted to a digital input for the RF transmitter. Here the Arduino Uno board with the ATMEGA328P microcontroller is used as it has a built in ADC converter. The accelerometer is calibrated by taking a range of x, y and z values of its output for forward, reverse, left and right steering of the vehicle.

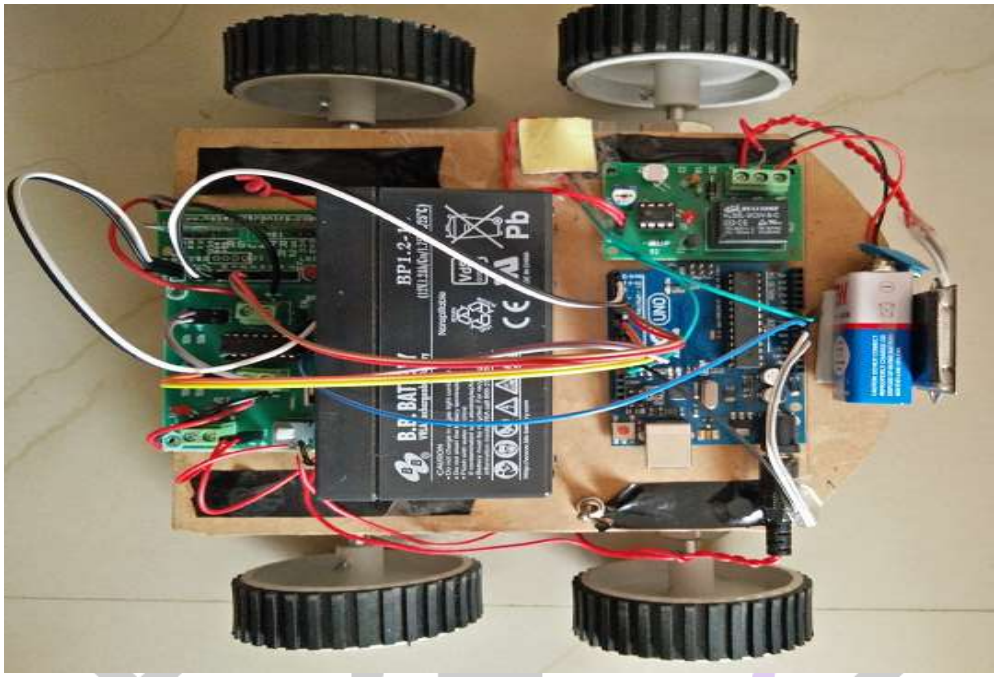

Figure 4.5:- Prototype Vehicle for Control Purpose

Figure 4.6:-Controller Circuit with Accelerometer ADXL335

The accelerometer outputs for X, Y and Z axis for different hand gestures are shown below:

FORWARD

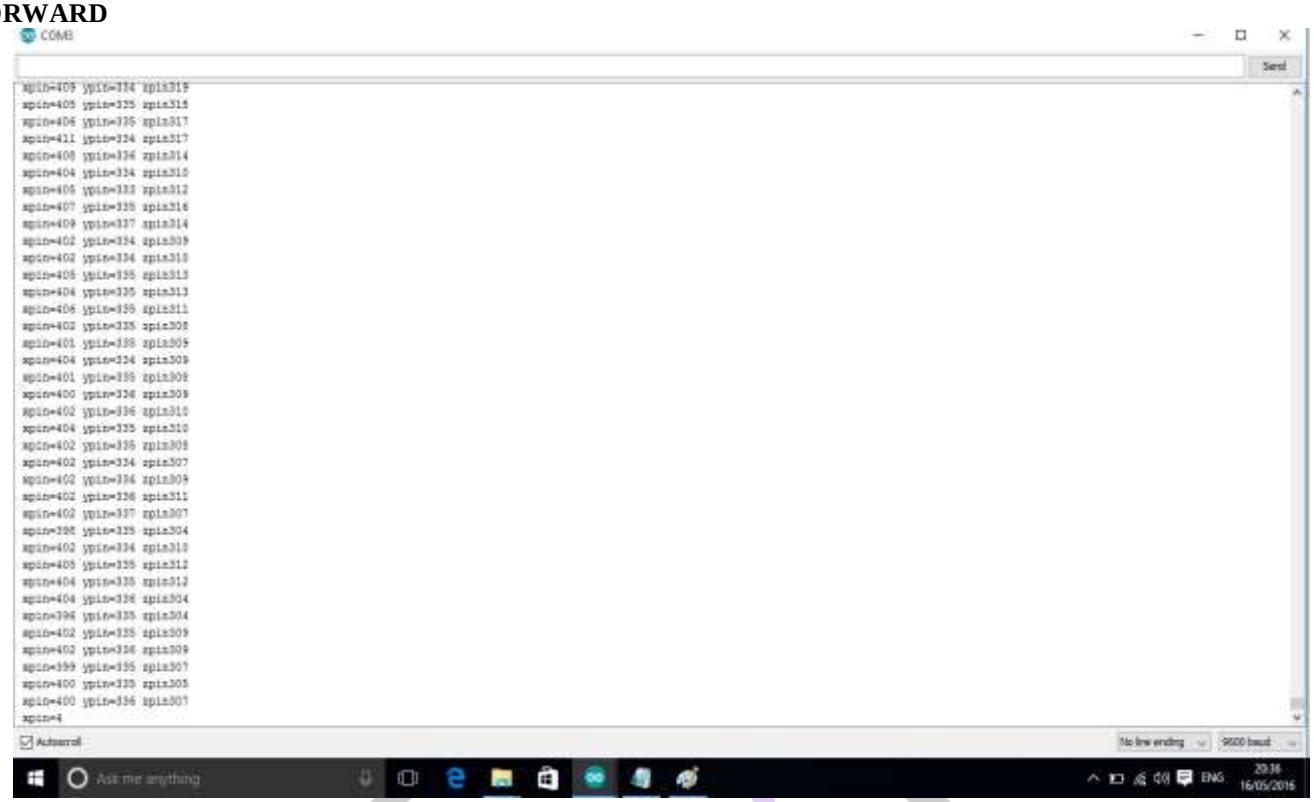

REVERSE

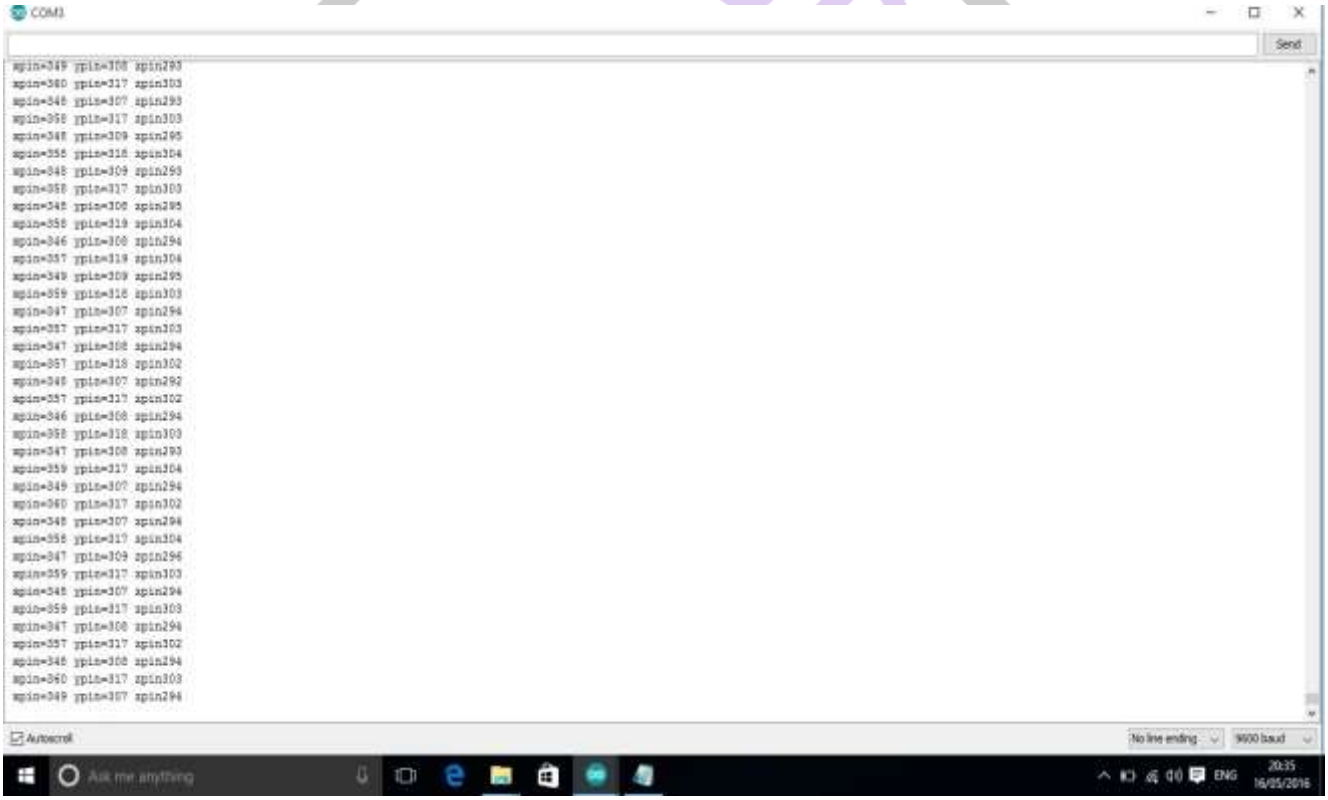

LEFT

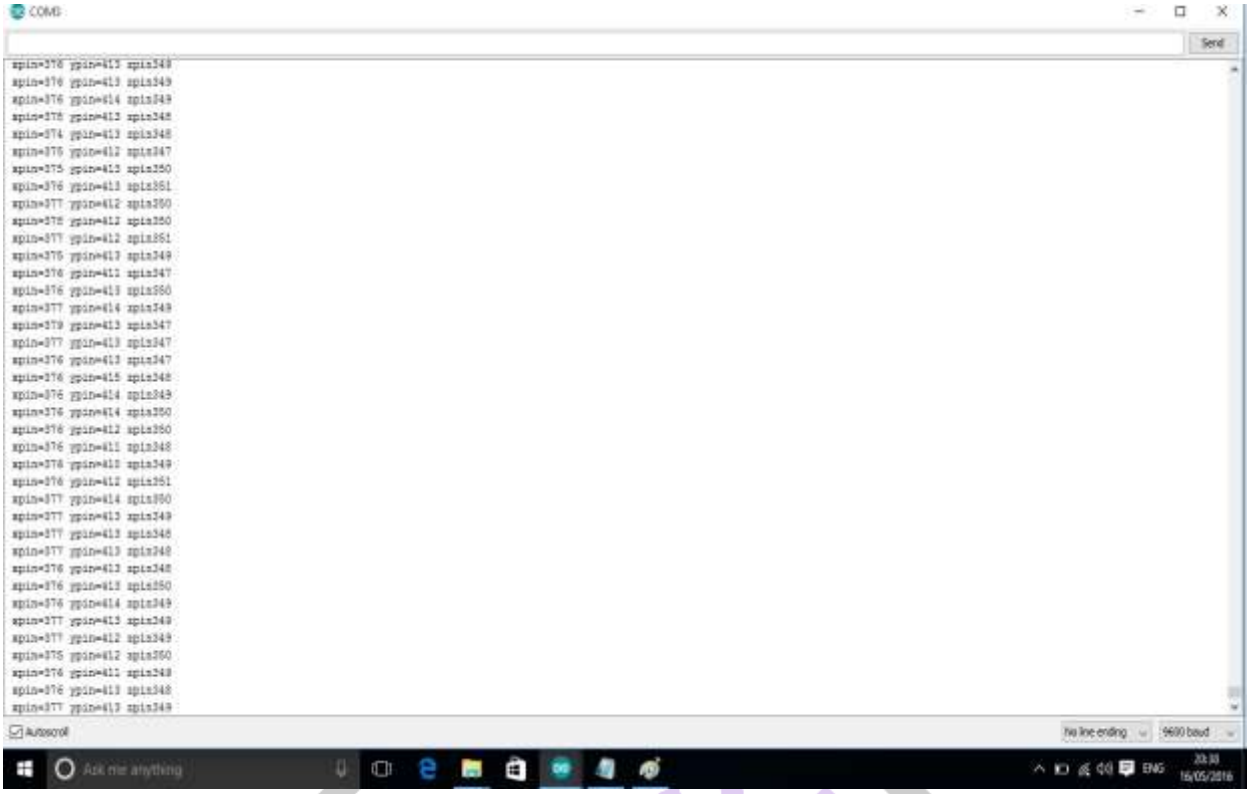

RIGHT

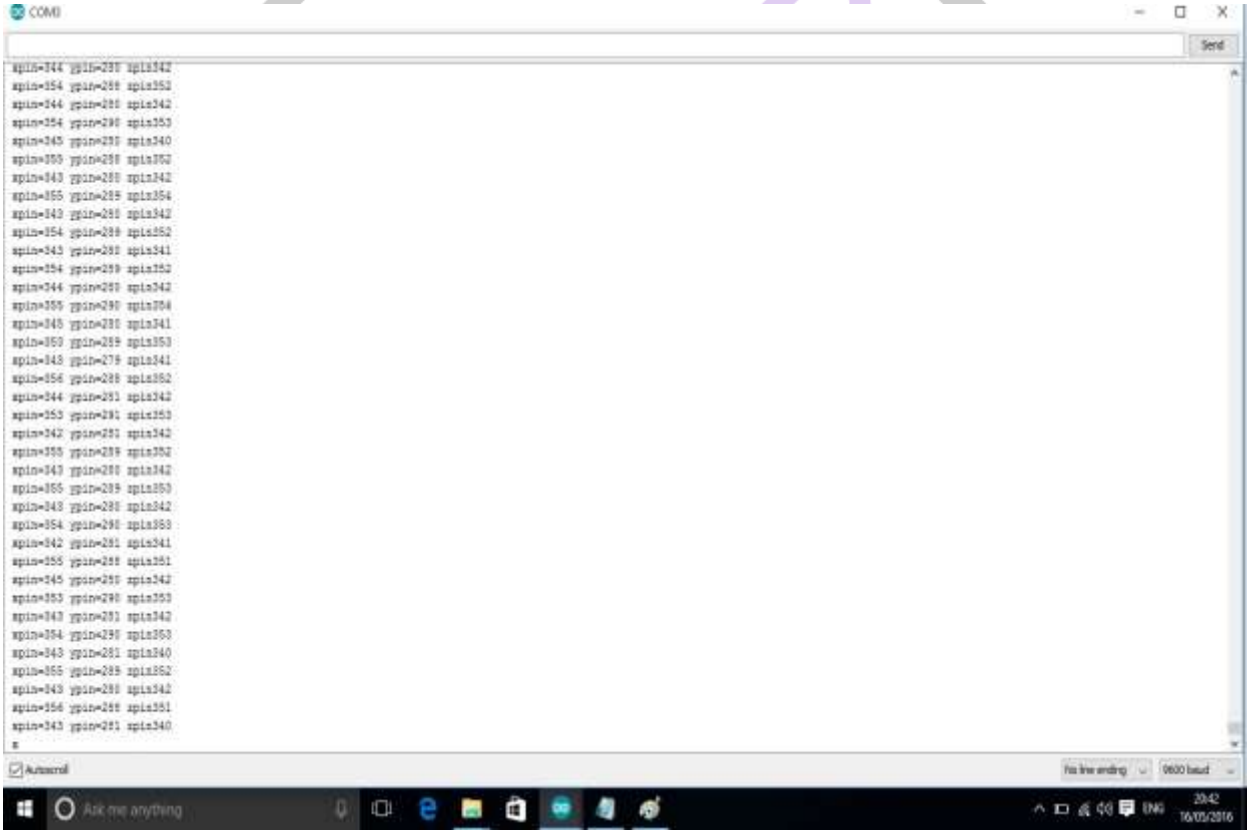

Figure 4.7: Calibration Procedure for X, Y & Z Axis Values

The final values calibrated for the program are:

DIRECTION	X-AXIS	Y-AXIS	Z-AXIS
FORWARD	351-357	300-315	300-321
LEFT	290-310	350-356	302-362
REVERSE	347-352	390-400	299-323
RIGHT	400-415	332-334	309-342

Table 4.1: Accelerometer calibrated values

The output instructions of the accelerometer through the microcontroller are fed to motor driver circuit wirelessly with the help of the RF transmitter-receiver module. The vehicle works according to the movements of the accelerometer in the accelerometer to digital values to give it to microcontroller. When the accelerometer is tilted downwards the vehicle moves forward, and when it's tilted towards right, left and upwards the chair moves towards right, left and backwards respectively. The wheel chair can be stopped by the eye blink movements as well. Additionally an IR sensor is fixed at the front of the vehicle to detect the obstacles; once the obstacle is detected the buzzer is set on. For the ease of the user and the vehicle navigation, an LDR circuit is also included such that it lights up if the surrounding level of light is low.

4.4Advantages

- No training required.
- Can be quicker than a physical remote control.
- Hands-free - could be invaluable in some environments
- Can be used by the disabled.

4.5 Applications

- Surveillance system for military purpose.
- It can be integrated into a wheelchair for handicapped people.
- Accelerometer based systems allow people to successfully and economically communicate with their environment just by their hand movements.

CONCLUSION

This project taught us Arduino's coding which we can use in the further future as the Arduino is useful in various instruments and also very important electronics equipment as well as about the basics of arduino. We learnt about the transmission of the signals through RF module and also the use of accelerometer. The project also cultivated dedication, team work and the division labour amongst us made this project to succeed. We had a great pleasure working on this project and working as a team. This project also provides the basic introduction review of accelerometer.

FUTURE SCOPE

Currently we are working on improving serial communication between the Arduions. We are planning to install a LCD panel on the gloves so that when the glove module run on the battery, then we can see the reading of the accelerometer (real time) and it is helpful in debugging operation. We are also working on improvising our GUI in the processing applet so that we have duplex communication management between devices.

REFERENCES

[1] A.AliceLinsie, J Mangaiyakarsi,(April 2013),HAND GESTURE RECOGNITION USING MEMS FOR SPECIALLY CHALLENGED PEOP.

[2] MEMS Accelerometer Based Nonspecific-User Hand Gesture Recognition by Ruize Xu, Shengli Zhou, and Wen J. Li, Fellow, IEEE.

[3] Hand gesture recognition using MEMS for specially challenged people. A.ALICE LINSIE1, J.MANGAIYARKARASI2

[4] Flex Sensor Based Robotic Arm Controller Using Micro Controller by Abidhusain Syed1, Zamrrud Taj H. Agasbal2, Thimmannagouday Melligeri 1,Bheemesh Gudur.