Control Strategy for Shunt Active Power Filters

PRAMOD

Post Graduate, M.Tech in PSE
Department of Electrical & Electronics Engineering,
UBDT College of Engineering, Davangere-577004, Karnataka, India

***Abstract*—This paper suggests a new method that consists of a four leg inverter(using IGBT) that is capable of simultaneously compensating problems like power factor, current imbalance and current harmonics, and also of injecting the energy generated by renewable energy power sources. The fourth leg of inverter is used to compensate the neutral current of load. The grid interfacing inverter can thus be utilized as: 1) Power converter to inject power generated from RES to the grid, and 2) shunt APF to compensate current unbalance, load current harmonics and load reactive power demand. The inverter is actively controlled in such a way that it draws/supplies fundamental active power from/to the grid. All of these functions may be accomplished either individually or simultaneously. This new control concept is demonstrated with extensive MATLAB/Simulink simulation studies.**

***IndexTerms*—Active power filter (APF), distributed generation (DG), Total harmonic distortion(THD), renewable energy (RE) and Voltage source Inverter (VSI), Pulse width modulation(PWM), Synchronous reference frame(SRF), Phase locked loop(PLL), Point of common coupling(PCC).**

I. INTRODUCTION

The widespread use of non-linear loads is leading to a variety of undesirable phenomena in the operation of power systems. The harmonic components in current and voltage waveforms are the most important among these. Conventionally, passive filters have been used to eliminate line current harmonics. However, they introduce resonance in the power system and tend to be bulky. So active power line conditioners have become popular than passive filters as it compensates the harmonics and reactive power simultaneously[1]. The active power filter topology can be connected in series or shunt and combinations of both. Shunt active filter is more popular than series active filter because most of the industrial applications require current harmonics compensation. Different types of active filters have been proposed to increase the electric system quality; a generalized block diagram of active power filter is presented in [2]. The classification is based on following criteria.

a. Power rating and speed of response required in compensated system
b. System parameters to be compensated (e.g. current harmonics, power factor, voltage harmonics)
c. Technique used for estimating the reference.

The electrical grid will include a very large number of small producers that use renewable energy sources, like solar panels or wind generators. One of the most common problems when connecting small renewable energy systems to the electric grid concerns the interface unit between the power sources and the grid, because it can inject harmonic components that may deteriorate the power quality. However, the extensive use of power electronics based equipment and non-linear loads at PCC generate harmonic currents, which may deteriorate the quality power [1],[2]. In [3] an inverter operates as active inductor at a certain frequency to absorb the harmonic current. A similar approach in which a shunt active filter acts as active conductance to damp out the harmonics in distribution network is proposed in [4]. Generally, current controlled voltage source inverters are used to interface the intermittent RES in distributed system.

This paper suggests a new method that consists of four leg VSI that is capable of simultaneously compensating problems like power factor, current imbalance and current harmonics, and also of injecting the energy generated by renewable energy power sources with a very low THD. Even when there is no energy available from the power source the Voltage source inverter can still operate, increasing the power quality of the electric grid. Thus the grid interfacing inverter is effectively utilized to perform the following functions

a. Active power injection
b. Current harmonics compensation at PCC.
c. Current unbalance and neutral current compensation in 3-phase 4-wire system.
d. Load reactive power demand support.

In three phase application with three leg inverter, if the load requires a neutral point connection a simple approach is to use a capacitor to split the dc link and tie the neutral point to the midpoint of the capacitor. In this case the unbalanced loads will cause the neutral currents that flow through the fourth wire distorting the output voltage. Another drawback is the need for excessively large dc link capacitors. The important parameters of VSIs are the level of dc link voltage, value of interface inductor and hysteresis band. These parameters must be carefully selected to provide satisfactory performance while tracking reference currents [5], [6]. In [7] a control strategy based on p-q theory is proposed where load current and inverter current sensing are required to compensate load and harmonics.

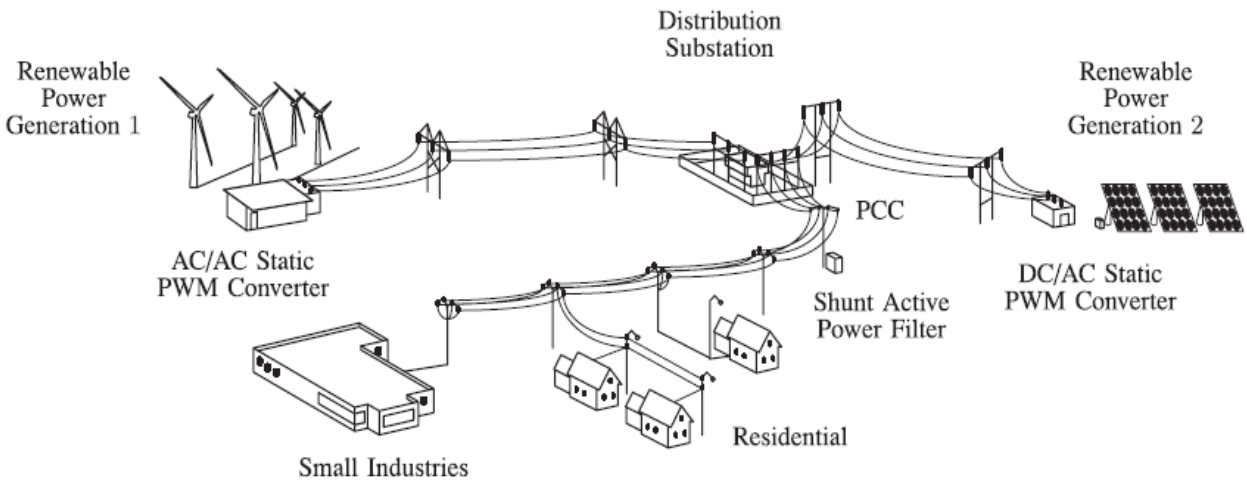

Fig. 1 Stand alone RES hybrid power generation system with shunt active filter.

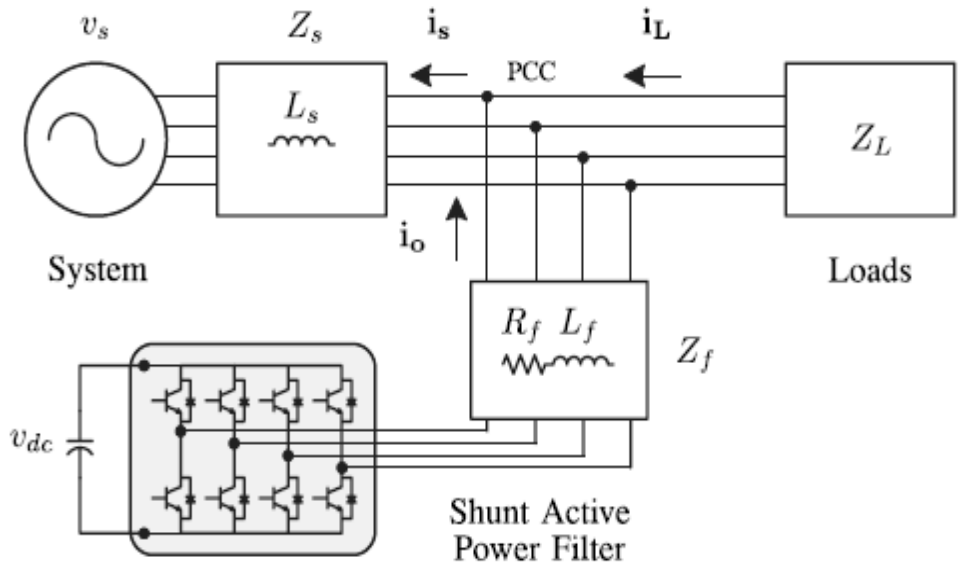

Fig. 2 Three phase equivalent circuit of the proposed shunt active power filter.

I. FOUR-LEG CONVERTER MODEL

Figure1 shows the configuration of a typical power distribution system with renewable power generation. It consists of various types of power generation units and different types of loads. Renewable sources, such as wind and sunlight, are typically used to generate electricity for residential users and small industries.Both types of power generation use ac/ac and dc/ac static PWM converters for voltage conversion and battery banks for long term energy storage. These converters perform maximum power point tracking to extract the maximum energy possible from wind and sun. The electrical energy consumption behavior is random and unpredictable, and therefore, it may be single- or three-phase, balanced or unbalanced, and linear or nonlinear.

An active power filter is connected in parallel at the point ofcommon coupling to compensate current harmonics, currentunbalance, and reactive power. It is composed by an electrolytic capacitor, a four-leg PWM converter, and a first-order output ripple filter, as shown in Fig. 2. This circuit considers the power system equivalent impedance Z_s, the converter output ripple filter impedance Z_f, and the load impedance Z_L.The four-leg PWM converter topology is shown in Fig. 3. This converter topology is similar to the conventional three-phase converter with the fourth leg connected to the neutral bus of the system. The fourth leg increases switching states from 8 (23) to 16 (24), improving control flexibility and output voltage quality [8], and is suitable for current unbalanced compensation.

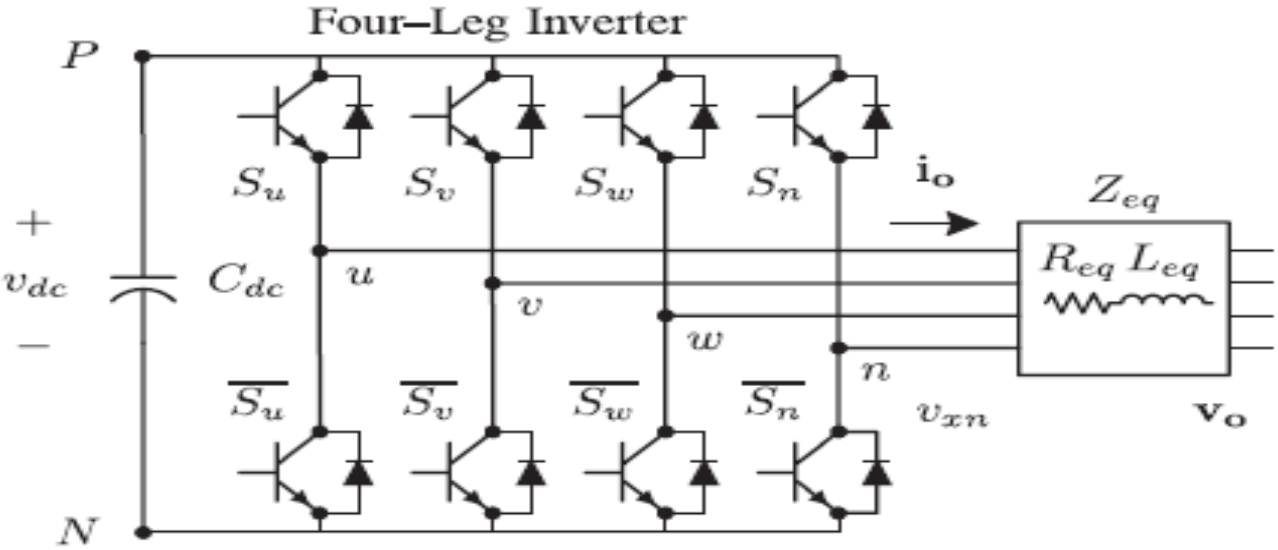

Fig. 3 Two-level four-leg PWM-VSI topology.

II. DIGITAL PREDICTIVE CURRENT CONTROL

The block diagram of the proposed digital predictive currentcontrol scheme is shown in Fig. 4. This control scheme is basically an optimization algorithm and, therefore, it has to be implemented in a microprocessor. Consequently, the analysis has to be developed using discrete mathematics in order to consider additional restrictions such as time delays and approximations.
The main characteristic of predictive control is the use of the system model to predict the future behavior of the variables to be controlled. The controller uses this information to select the optimum switching state that will be applied to the power converter, according to predefined optimization criteria.The predictive control algorithm is easy to implement and tounderstand, and it can be implemented with three main blocks, as shown in Fig. 4.

1)*Current Reference Generator*:This unit is designed to generate the required current reference that is used to compensate the undesirable load current components. In this case, the system voltages, the load currents, and the dc-voltage converter are measured, while the neutral output current and neutral load current are generated directly from these signals .

2) *Prediction Model*:The converter model is used to predict the output converter current. Since the controller operates in discrete time, both the controller and the system model must be represented in a discrete time domain [9]. The discrete time model consists of a recursive matrix equation that represents this prediction system.

3) *Cost Function Optimization*: In order to select the optimal switching state that must be applied to the power converter, the 16 predicted values obtained for $\mathbf{i_o}[k+1]$ are compared with the reference using a cost function 'g' ,as follows

$$g[k+1] = (i_{ou}^*[k+1] - i_{ou}[k+1]^2 + (i_{ou}^*[k+1] - i_{ou}[k+1]^2 + (i_{ou}^*[k+1] - i_{ou}[k+1]^2 + (i_{ou}^*[k+1] - i_{ou}[k+1]^2 \ldots\ldots\ldots\ldots\ldots\ldots(1)$$

The output current (i_0) is equal to the reference (i_0^*) when$g$ = 0. Therefore, the optimization goal of the cost function is to achieve a g value close to zero. The voltage vector $\mathbf{V_{xN}}$ that minimizes the cost function is chosen and then applied at the next sampling state. During each sampling state, the switching state that generates the minimum value of g is selected from the 16 possible function values. The algorithm selects the switching state that produces this minimal value and applies it to the converter during the k + 1 state.

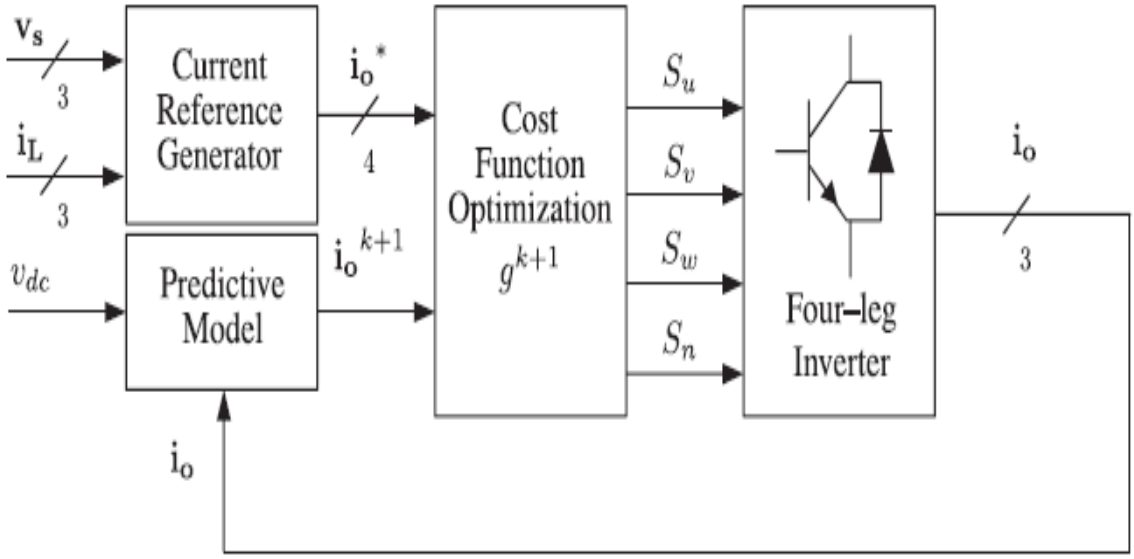

Fig. 4 Proposed predictive digital current control block diagram.

III. CURRENT REFERENCE GENERATION

A *dq*-based current reference generator scheme is used to obtain the active power filter current reference signals. This scheme presents a fast and accurate signal tracking capability. This characteristic avoids voltage fluctuations that deteriorate the current reference signal affecting compensation performance [10]. The current reference signals are obtained from the corresponding load currents as shown in Fig. 5. This module calculates the reference signal currents required by the converter to compensate reactive power, current harmonics, and current imbalance. The displacement power factor (sin $Ø_{(L)}$) and the maximum totalharmonic distortion of the load ($THD_{(L)}$) defines the relationships between the apparent power required by the active power filter, with respect to the load, as shown

$$\frac{S_{APF}}{S_L} = \frac{\sqrt{\sin \emptyset(L) + THD\,(L)^2}}{\sqrt{1+THD\,(L)^2}} \ldots\ldots\ldots\ldots\ldots(2)$$

Where the value of THD(L) includes the maximum compensable harmonic current, defined as double the sampling frequency *fs*. The frequency of the maximum current harmonic component that can be compensated is equal to one half of the converter switching frequency. The *dq*-based scheme operates in a rotating reference frame;therefore, the measured currents must be multiplied by the sin(wt) and cos(wt) signals. By using *dq*-transformation, the *d* current component is synchronized with the correspondingphase-to-neutral system voltage, and the *q* current component is phase-shifted by 90◦. The sin(wt) and cos(wt) synchronized reference signals are obtained from a synchronous reference frame (SRF) PLL [11]. The SRF-PLL generates a pure sinusoidal waveform even when the system voltage is severely distorted

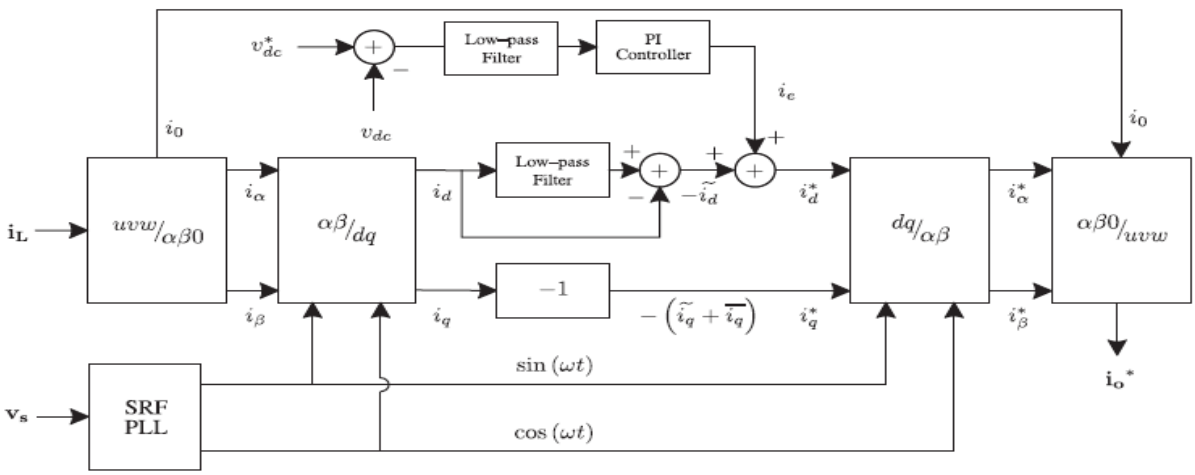

Fig. 5*dq*-based current reference generator block diagram.

A low-pass filter (LPF) extracts the dc component of the phase currents i_d to generate the harmonic reference components $-\hat{i_d}$. The reactive reference components of the phase-currents are obtained by phase-shifting the corresponding ac and dc components ofby i_q 180◦. In order to keep the dc-voltage constant, the amplitude of the converter reference current must be modified by

adding an active power reference signal i_e with the *d*-component The resulting signals i_d^* and i_q^* are transformed back to a three-phase system by applying the inverse Park and Clark transformation, The cutoff frequency of the LPF used in this model 20 Hz. One of the major advantages of the *dq*-based current reference generator scheme is that it allows the implementation of a linear controller in the dc-voltage control loop. However, one important disadvantage of the *dq*-based current reference frame algorithm used to generate the current reference is that a second order harmonic component is generated in *id* and *iq* under unbalanced operating conditions The second-order harmonic cannot be removed from *id* and *iq*, and therefore generates a third harmonic in the reference current when it is converted back to ABC frame [12].

A. *DC-Voltage Control*

The dc-voltage converter is controlled with a traditional PIcontroller. This is an important issue in the evaluation, sincethe cost function is designed using only current references, in order to avoid the use of weighting factors. Generally, these weighting factors are obtained experimentally, and they are not well defined when different operating conditions are required.Additionally, the slow dynamic response of the voltage across the electrolytic capacitor does not affect the current transient response. For this reason, the PI controller represents a simple and effective alternative for the dc-voltage control.

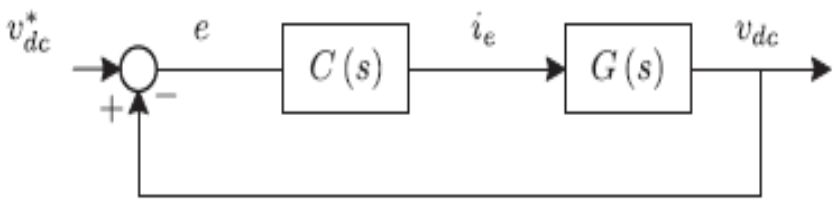

Fig. 7 DC-voltage control block diagram.

IV. SIMULINK MODEL OF PROPOSED SYSTEM.

Thesimulink model of the shunt active power filter is as shown in the Fig. 8 and Fig. 9 shows Shunt APF with PI controller and Clarks transformation.

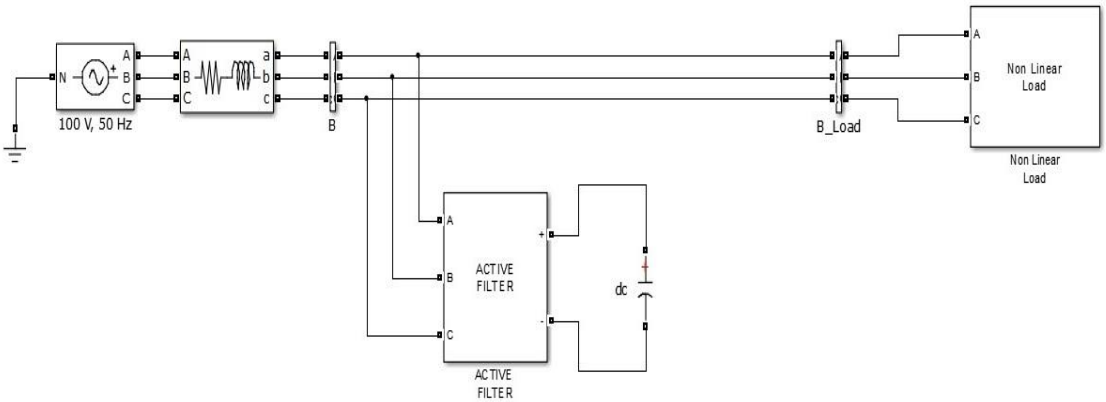

Fig 8 SIMULINK model of shunt APF connected at the midpoint of the system

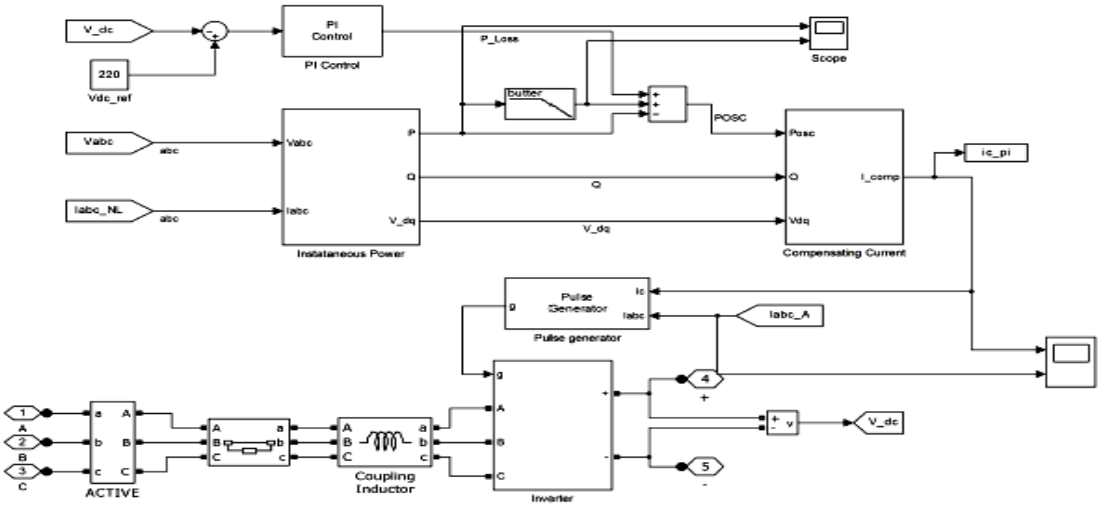

Fig. 9 Shunt APF model with PI controller and Clarks transformation.

V. RESULTS AND DISCUSSIONS

The resulted waveforms are as shown in theFig. 10, and these results are obtained for Shunt APF with PI controller and Clark's-transformation. The same model can be modeled further by using MOSFET's and Park's-transformation in MATLAB/Simulink.

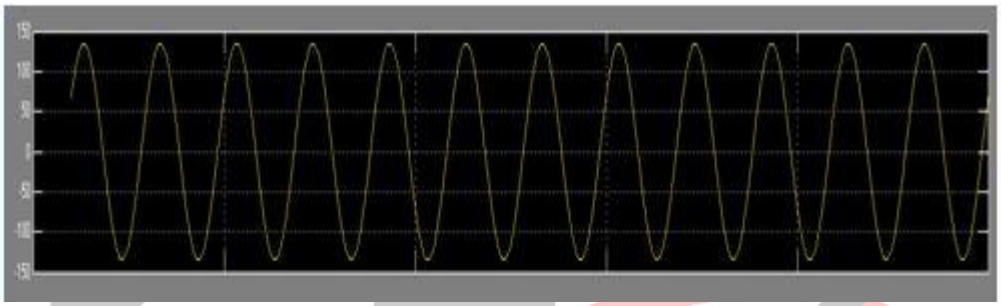

10.1 Voltage of source corresponding to phase-neutral.

10.2 Waveform of current at load.

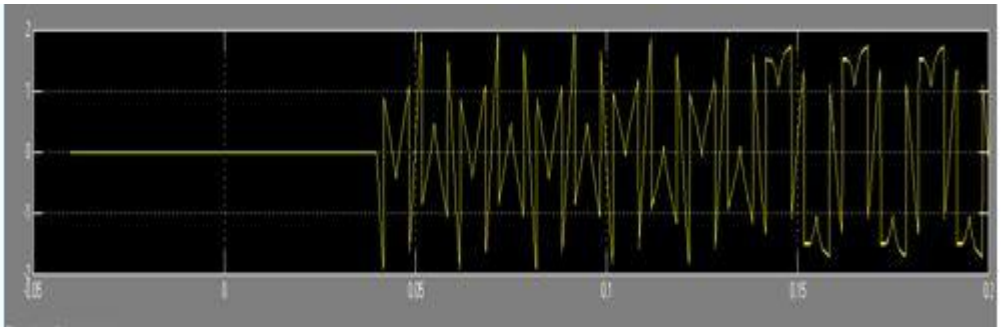

10.3Yield current of filter.

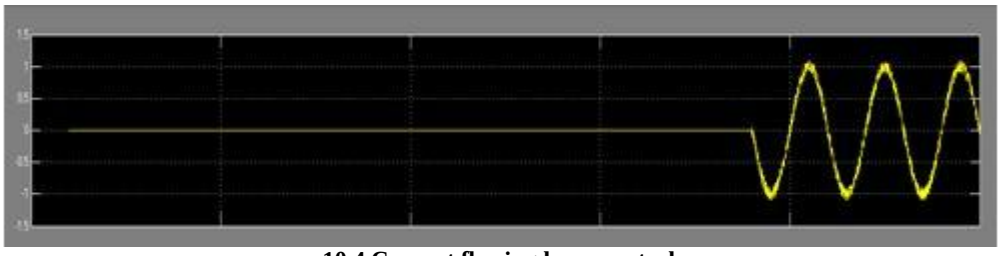

10.4 Current flowing heap-neutral.

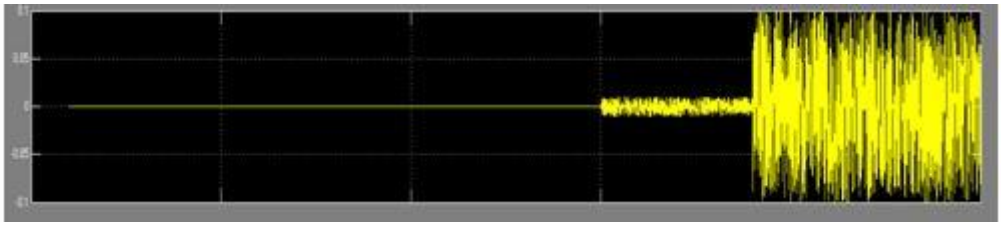

10.5 Neutral current of system.

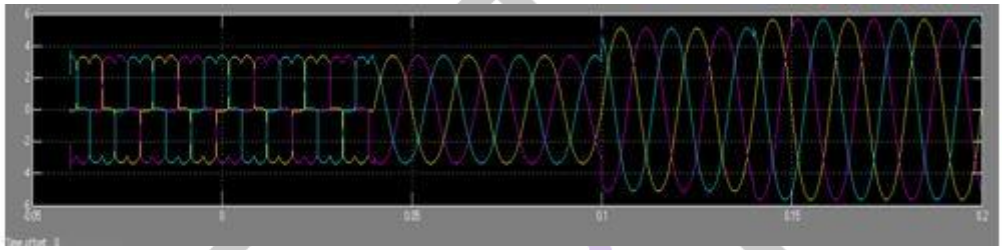

10.6 Currents corresponding to systems.

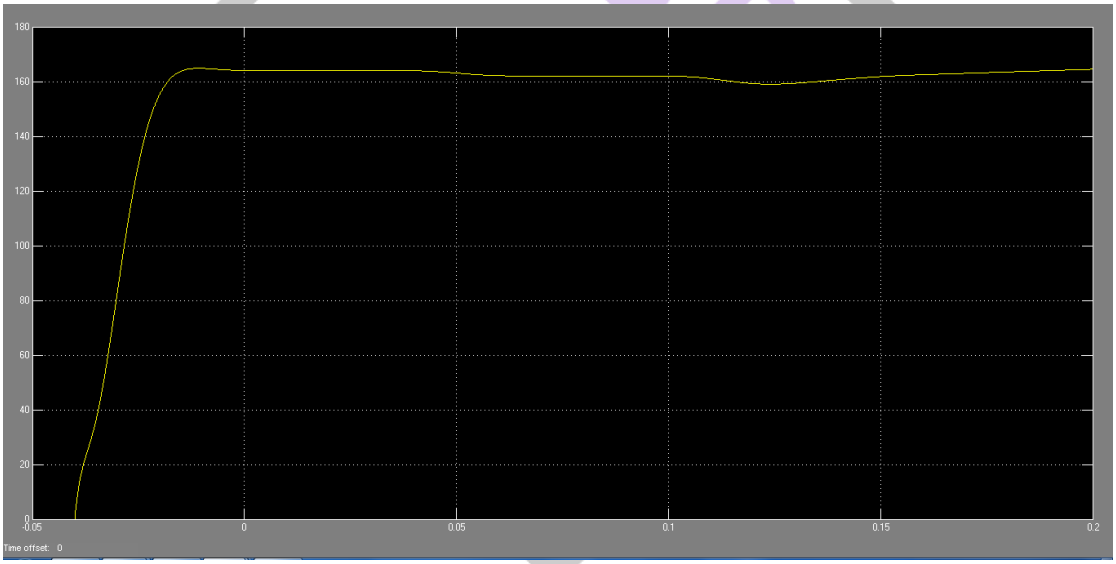

10.7 Waveform for dc-volt changer.

VII. CONCLUSION

This paper presented a control of an Three phase Four leggrid interfacing inverter improve the quality of power at PCCfor a 3 phase 4 wire system. It has been shown that the gridinterfacing inverter can simultaneously be utilized to injectpower generated from RES to PCC and to improve the quality of power at PCC. Thus the proposed controller preciselymanages any variation in real power at dc link and effectivelyfeeds it to the main grid. The current harmonics caused by nonlinear load connected at PCC are compensated effectively suchthat the grid currents are always maintained sinusoidal at unitypower factor. This approach thus eliminates the need foradditional power conditioning equipment to improve the quality of power at PCC. Thus the load neutral current isprevented from flowing into the grid side by compensating itlocally from the fourth leg of the inverter. The control model presented in this paper is designed for Shunt APF with PI controller and Clark's transformation. In addition to this, Parks transformation is yet to be added in the simulink model and to be study.

REFERENCES

[1] O.VodyakhoT.Kim "Shunt active filter based on three-level inverter for 3-phase four-wire systems" lET proceedings on Power Electronics, Vol.2, No.3, pp. 216-226, Nov 2009.

[2] Joao afousonMauriaoAredes, Edson Watanabe ,Julio n Martins, "Shunt Active Filter for Power Quality Improvement", International Conference VIE 2000 - Electricity for sustainable Urban Development , Lisboa, Portugal , pp I -4, Nov 2000.

[3] H. Akagi, Y. Kanazawa, A. Nabae, "Generalized theory of Instantaneous Reactive power in Three phase circuits;" WEC'83 –IntPower Electronics Conference Tokyo" pp 1375-1386, Japan 1983.

[4] U. Borup, F. Blaabjerg, and P. N. Enjeti, "Sharing of nonlinear load inParallel-connected three-phase converters," IEEE Transactions on Industrial applications., Vol. 37, no. 6, pp. 1817-1823, Nov.l Dec. 2001.

[5] P. Jintakosonwit, H. Fujita, H. Akagi, and S. Ogasawara, "Implementation and performance of cooperative control of shunt active filters for harmonic damping throughout a power distribution system," IEEE Transac. Ind. Appl., vol. 39, no. 2, pp. 556-564, Mar./Apr. 2003.

[6] Mahesh K.Mishra, Member IEEE and K.Karthikeyan,"A study onDesign and Dynamics of Voltage Source Inverter in current control mode to compensate unbalanced and Non linear 10ads",International Conference on Power Electronics, Drives and Energy Systems PEDES'06, pp 1-8, Sep 2006

[7] F.Krim, Senior Member IEEE, " Parmeter Estimation of Shunt active Filter for power quality improvement", The 5th International Conference on Power Engineering and Optimization Conference (PEOCO 2011), Shah Alam, Selangor, Malaysia , pp 306-311, June 2011.

[8] S. Ali, M. Kazmierkowski, “PWM voltage and current control of four-leg VSI,” presented at the ISIE, Pretoria, South Africa, vol. 1, pp. 196–201, Jul. 1998

[9] S. Kouro, P. Cortes, R. Vargas, U. Ammann, and J. Rodriguez, “Modelpredictive control—A simple and powerful method to control power converters,” *IEEE Trans. Ind. Electron.*, vol. 56, no. 6, pp. 1826–1838, Jun.2009.

[10] M. I. M. Montero, E. R. Cadaval, and F. B. Gonzalez, “Comparison ofcontrol strategies for shunt active power filters in three-phase four-wire systems,” *IEEE Trans. Power Electron.*, vol. 22, no. 1, pp. 229–236, Jan.2007.

[11] S.-K. Chung, “A phase tracking system for three phase utility interfaceInverters,” *IEEE Trans. Power Electron.* vol. 15, no. 3, pp. 431–438, May 2000.

[12] L. Czarnecki, “On some misinterpretations of the instantaneous reactive power p-q theory,” IEEE Trans. Power Electron., vol. 19, no. 3, pp. 828– 836, May 2004.

.