DESIGN AND SIMULATION ANALYSIS OF SEVEN LEVEL CASCADED GRID CONNECTED MULTILEVEL INVERTER FOR SPV SYSTEM

Prof. C.S. Sharma[1], Rahul Tamrakar[2]

[1]Associate Professor, [2]Research Scholar
Department of electrical engineering
Samrat Ashok Technological Institute Vidisha, Madhya Pradesh

Abstract: **This paper presents latest development of modeling and control of a single-phase 7 -level cascade multilevel DC-AC grid connected inverter. Each inverter bridge is associated with a solar panel. The results of MATLAB modeling of the system detail the comparative study of inverter topologies which is the multilevel inverter topology with reduced number of switches with nearly sinusoidal output, thereby reducing gate driver circuit and layout of optimizing circuit which reduces THD, losses, switching stress, EMI, low cost, high reliability and mass-production for converting electrical energy from the pv module to the grid. The proposed control scheme for power quality enhancement in grid connected PV system simulated using MATLAB/ SIMULINK.**

***Index Terms*:- Multilevel inverter, PWM Technique, Photo-Voltaic panels, THD, Grid, Inverter topology, EMI , Renewable energy.**

I. INTRODUCTION

Power-electronic inverters are getting popular for different industrial drive applications. In recent years also high-power and medium-voltage drive applications have been introduced. To overcome the limited semiconductor voltage and current ratings, some kind of series and parallel connection will be necessary. Due to their ability to synthesize waveforms with a superior harmonic spectrum and attain higher voltages, multi-level inverters are receiving increasing attention in the previous couple of years. The multilevel inverter was introduced as a solution to increase the converter operating voltage over the voltage limits of classical semiconductors. One of the significant advantages of multilevel configuration is the harmonic reduction in the outturn waveform without increasing switching frequency or decreasing the inverter power output.

The outturn voltage waveform of a multilevel inverter is composed of the number of levels of voltages, typically obtained from different capacitor voltage sources. The so called multilevel starts from three levels. As the extensive number of levels, the output THD (Total Harmonic Distortion) approaches zero. The number of the achievable voltage levels, is limited by voltage unbalance issues, voltage clamping requirement, circuit layout. Multilevel inverters synthesizing expansive number of levels have a lot of merits such as improved output waveform, a smaller filter size, a lower EMI. The principle advantage of using multilevel inverters is the low harmonic distortion obtained due to the expansive voltage levels at the output and reduced stresses on the switching devices used.A grid tied inverter is a sine wave inverter designed to introduce electricity into the electric power distribution system. these inverters must be synchronized with the recurrence of the network. They usually contain one or more MPPT (Maximum power point tracking) features to get the maximum amount of power, and also include safety features

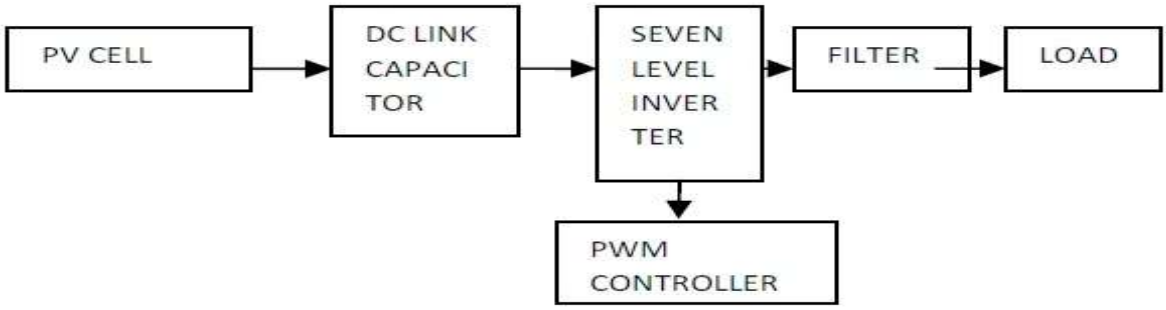

Fig. Grid connected solar pv system

II. MULTILEVEL INVERTER TOPOLOGIES:

The topology of multilevel inverter can be classified into three types

a)Diode-clamped multilevel inverter (DCMI).

b) Flying-capacitor multilevel inverter (FCMI).

c) Cascaded multilevel inverter with separated DC sources (CISDCS).

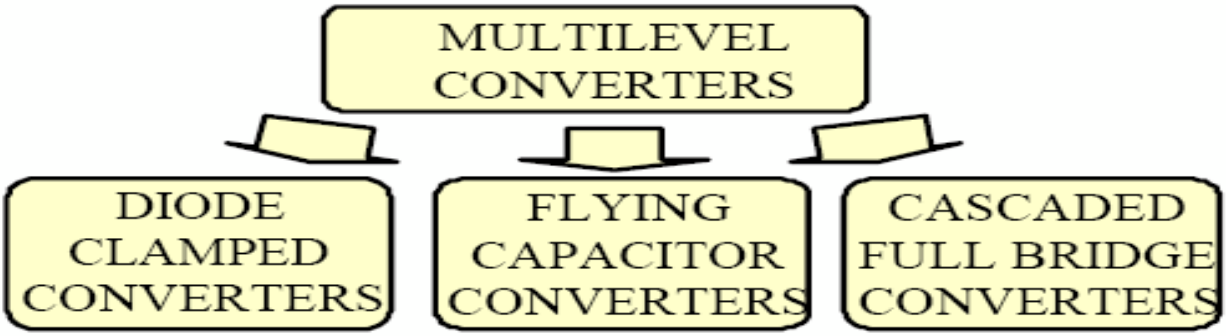

Fig. MLI topology

***(A)Control strategy*:** The following are the different control strategies for an inverter,

(i) Bipolar and Unipolar PWM
(ii)Carrier based PWM
(a) Phase shifted multi-carrier modulation
(b) Level shifted multi-carrier modulation
(iii)Stair case modulation
(iv)Selective harmonic elimination scheme
(v)Space vector modulation scheme

(B)5-level Cascaded H-bridge multilevel inverter *:*The outturn voltage of this inverter has 5 levels like in the previous multilevel inverters. This inverter consists of two H-bridge inverters that are connected in cascade form. For a 5-level cascaded H-bridge multilevel inverter 8 switching devices are needed.

(1)Advantages:

- The number of expected output voltage levels is more than twice the dc sources (m = 2s + 1).
- The arrangement of H-bridges makes for modularized format and packaging. This will enable the manufacturing process to be done more rapidly and economically.

(2)Disadvantages*:* Separate dc sources are required for each H-bridges. This will limit its application to products that already have multiple separate dc source SDCSs readily available.

(C)Proposed Topology with reduced number of switches: The general idea includes utilizing a higher number of active semiconductor switches to perform the power conversion in little voltage steps. There are several advantages to this approach when compared with the conventional power conversion approach. The little voltage steps lead to the production of higher power quality waveforms and also reduce voltage (dv/dt) weight on the load and the electromagnetic compatibility concerns. Another important feature of multilevel inverters is that the semiconductors are wired in a series type connection, which allows operation at higher voltages. However, the arrangement is typically made with clamping diodes, which eliminates over voltage concerns. Furthermore, since the switches are not actually series connected, their switching can be staggered, which reduces the switching frequency and thus the switching losses.The topological structure of multilevel inverter must cope with the following points.

1. It should have less switching devices.

2. It should be capable of enduring very high input voltage.

3. Each switching device should have lesser switching frequency owing to multilevel approach.

There are number of multilevel concepts used for various applications. different multilevel circuits are utilized to create multiple voltage levels. Some of the multilevel inverter concepts with various voltage levels are given below multilevel inverters have been widely acknowledged for high power and high voltage applications. Their performance is highly superior to that of conventional three level inverters due to small harmonic distortion, lower electromagnetic interference, and greater dc link voltages. However, it has some limitations such as increased number of components, complex pulse width modulation control method, and voltage-balancing problem. A new topology with a reversing-voltage component is proposed to improve the multilevel performance by compensating the limitations mentioned. This topology requires fewer components compared to

existing inverters (especially in higher levels) and requires fewer carrier signals and gate drives. There- fore, the overall cost and complexity are reduced especially for higher output voltage levels.

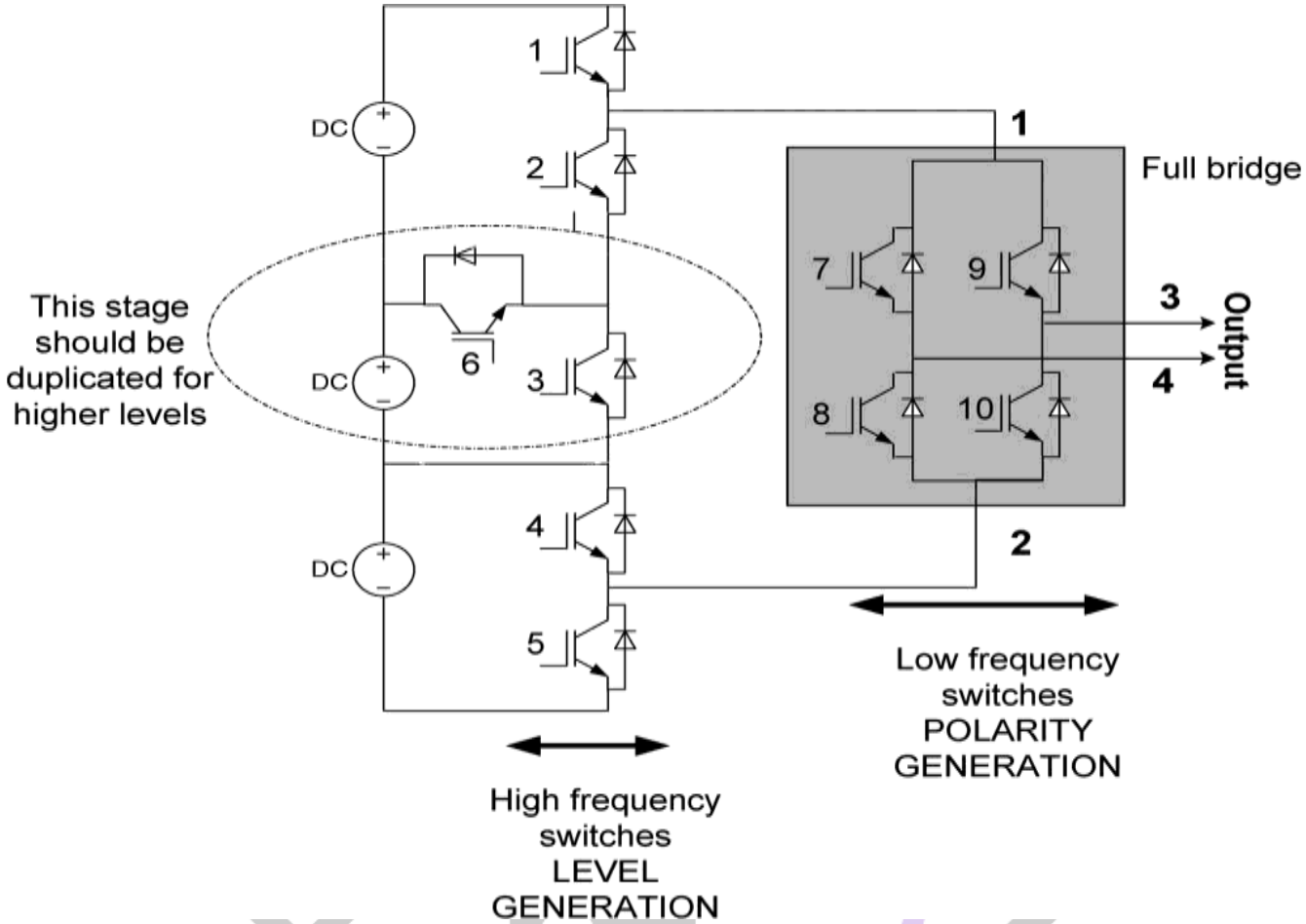

Fig. Schematic of a seven-level inverter in single phase

III.MATLAB SIMULATION OF PROPOSED TOPOLOGY

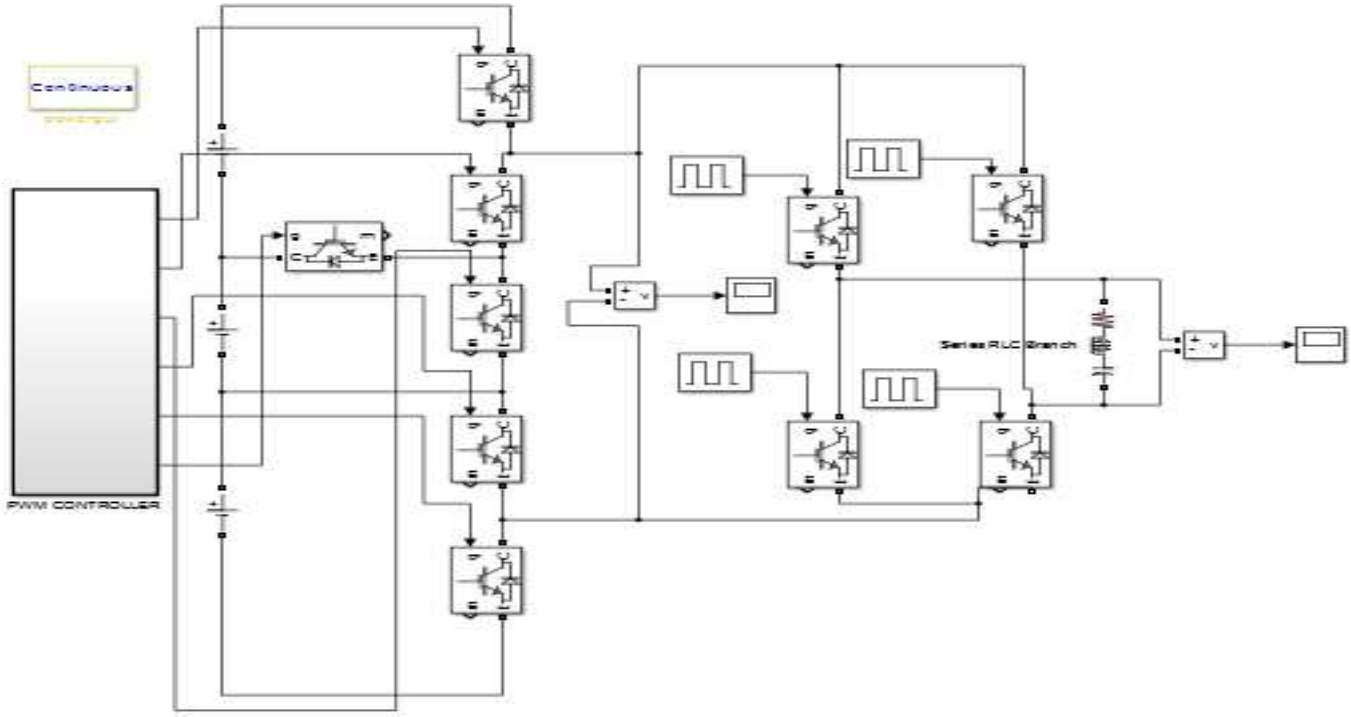

Fig. 7-level Cascaded H-bridge multilevel inverter with reduced device count

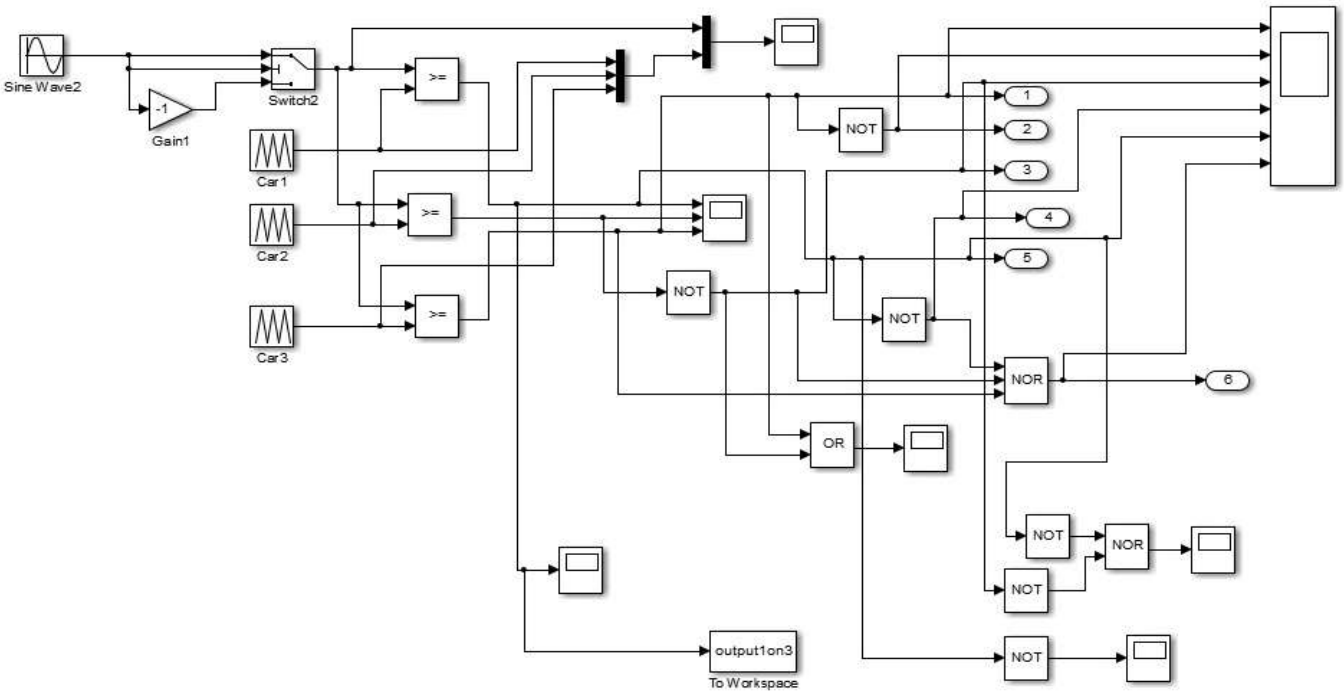

Fig. Simulink model of PWM block of the proposed seven level Inverter

***PV Array*:** The modules in a PV array are initially connected in series to obtain the desired voltages, the individual modules are then connected in parallel to allow the system to create more current.

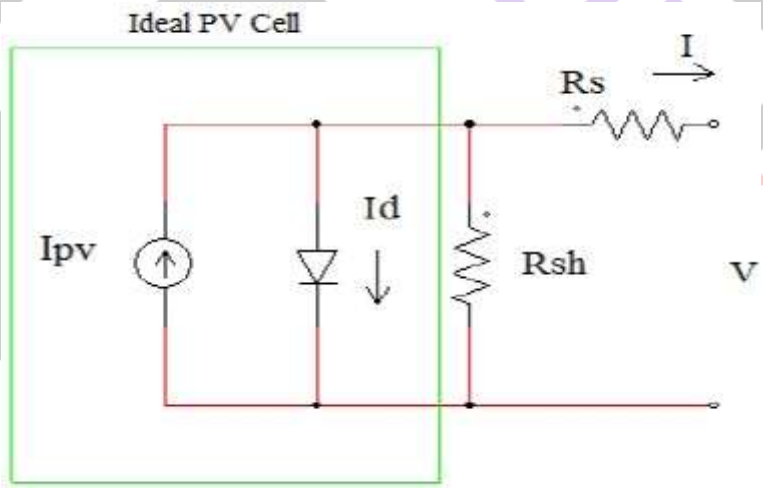

Fig. Equivalent circuit of Solar PV cell

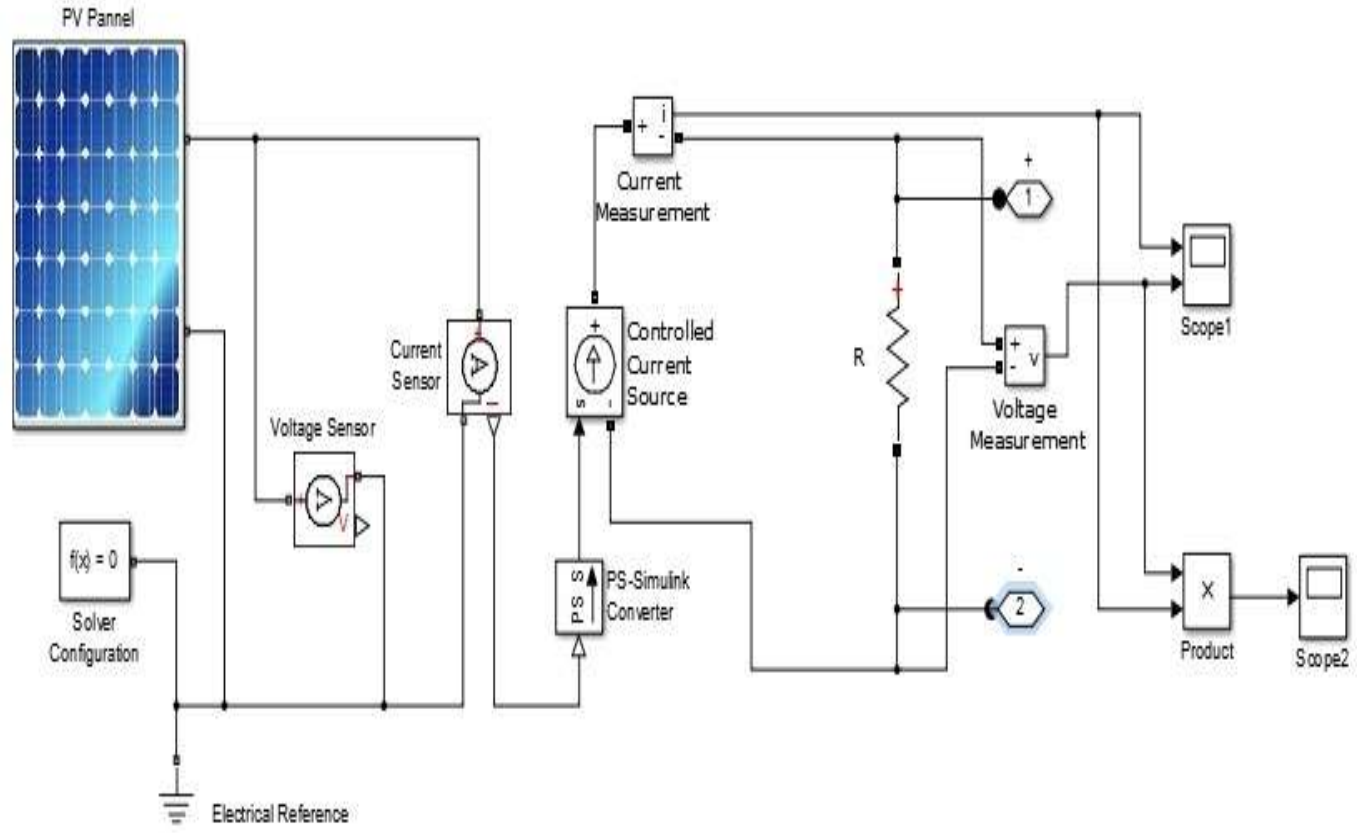

Fig. Simulation model of spv pannel

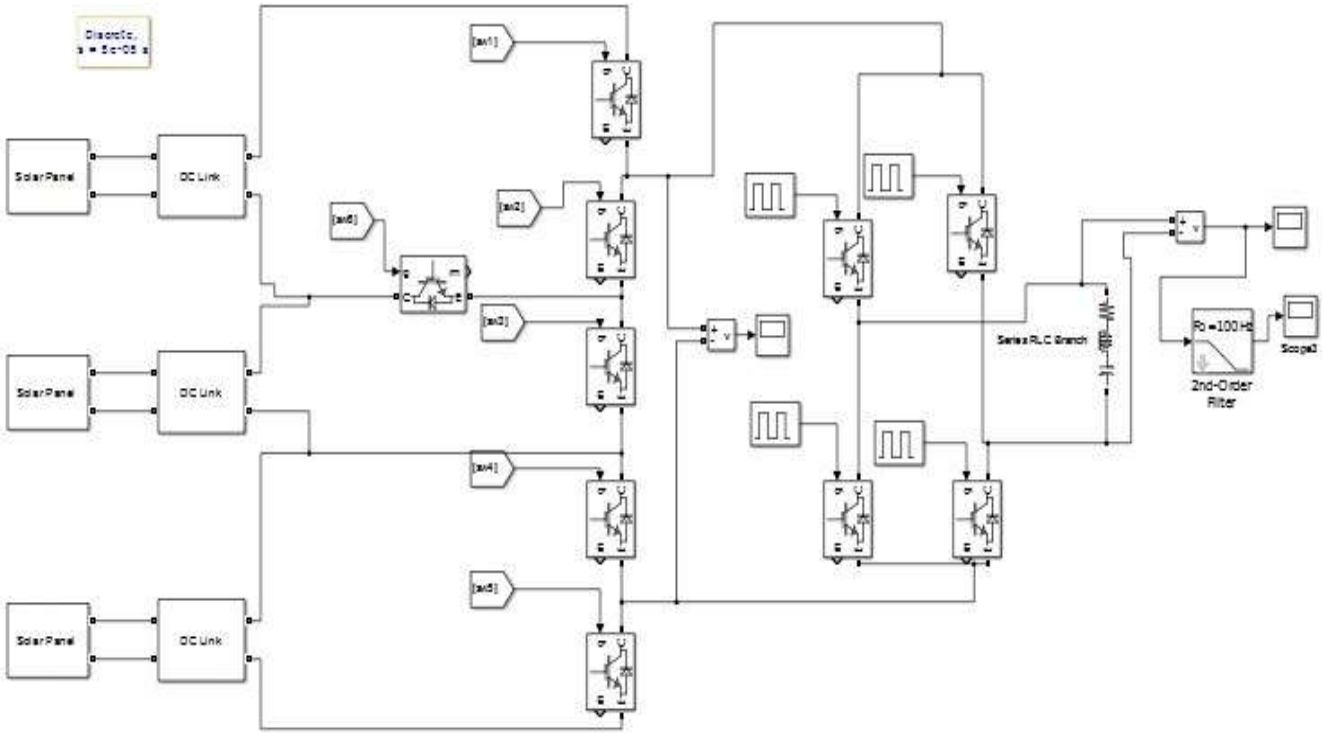

Fig. 7-level Cascaded H-bridge multilevel inverter connected with pv array

IV.SIMULATION RESULTS

(A)Output pulses of pwm block

These are the comparison of Sinusoidal wave and carrier wave

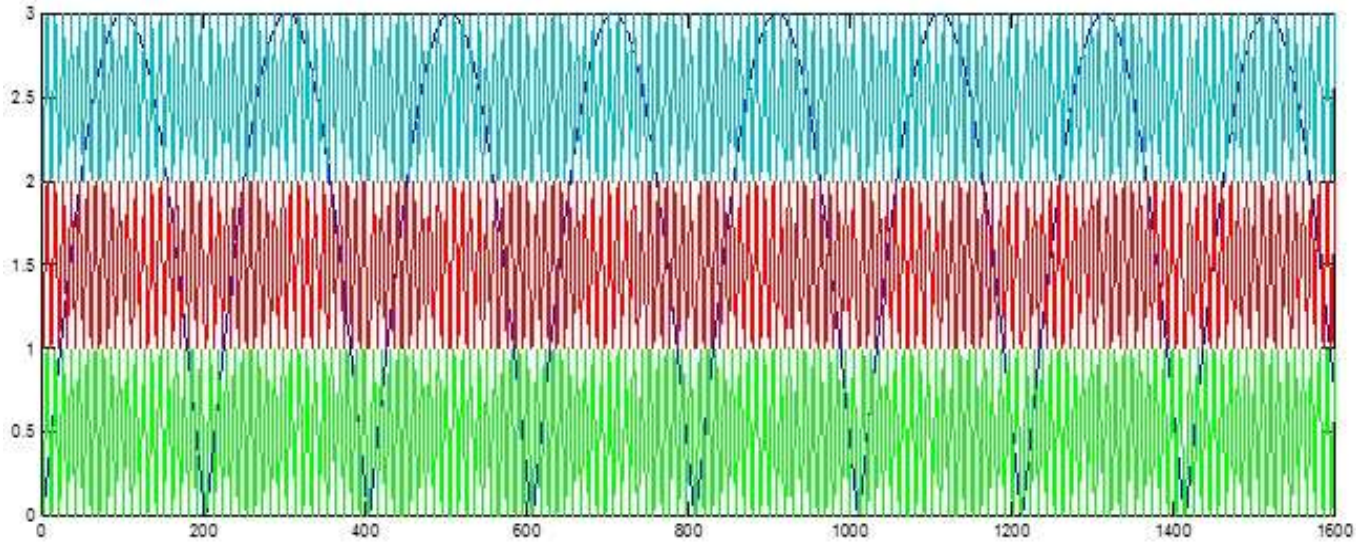

Fig. Principle of control signal generation.

After comparison of sinusoidal wave and carrier wave three output pulses are generated which are following in the fig.

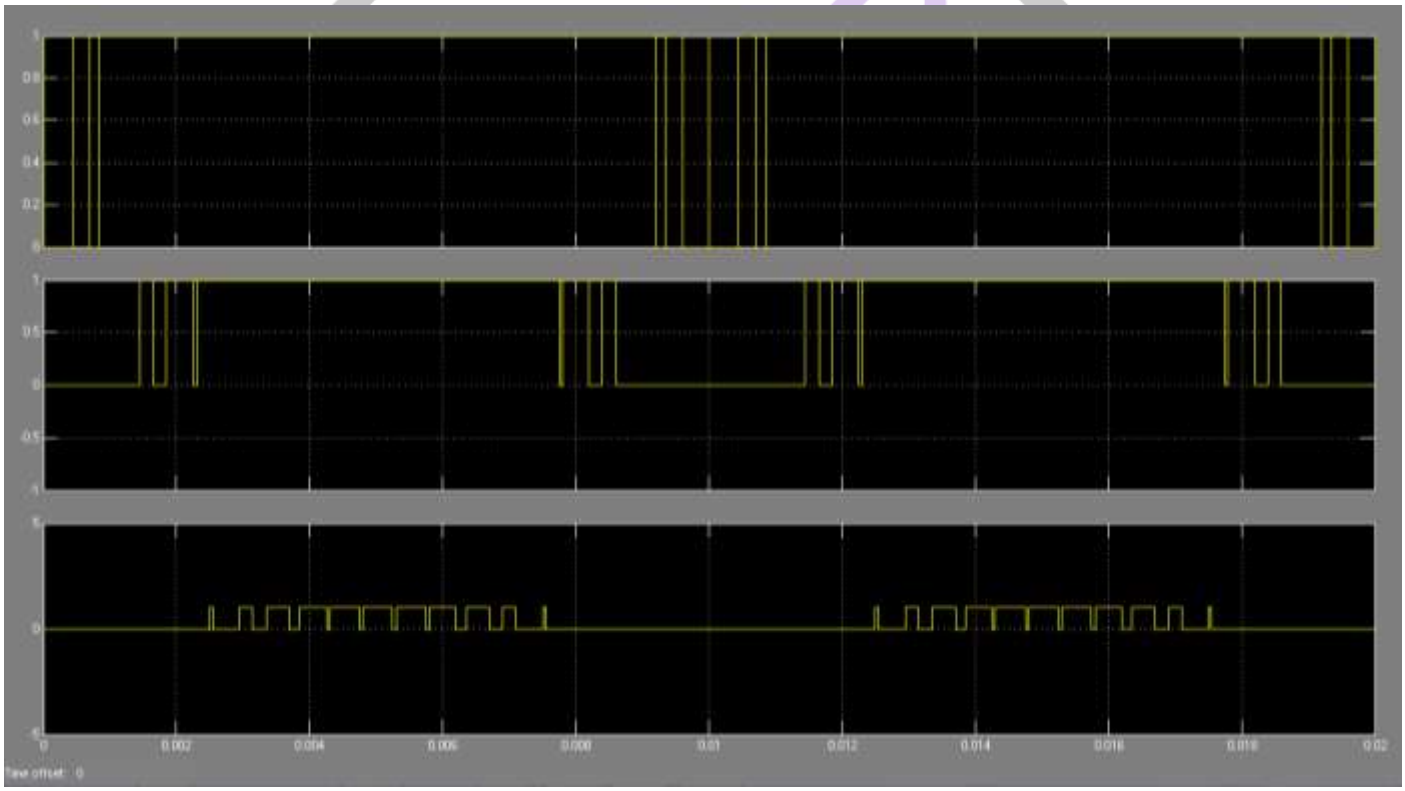

Fig. genrated pulsed after comparison of seven level Inverter

After using the logic gate operation NOT, AND, OR and NOR, we got six pulses

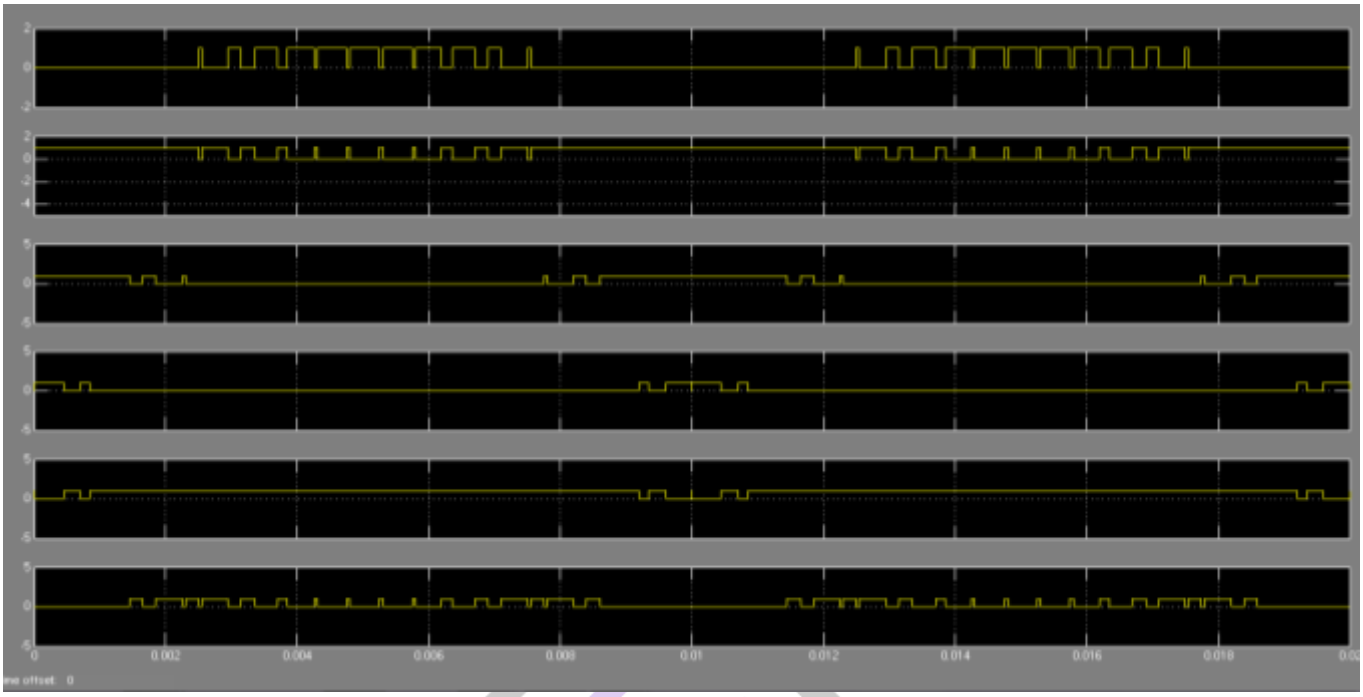

Fig. Final output pulses of seven level Inverter

(C)Output Waveform of MLI

The Output waveform of DC Levels

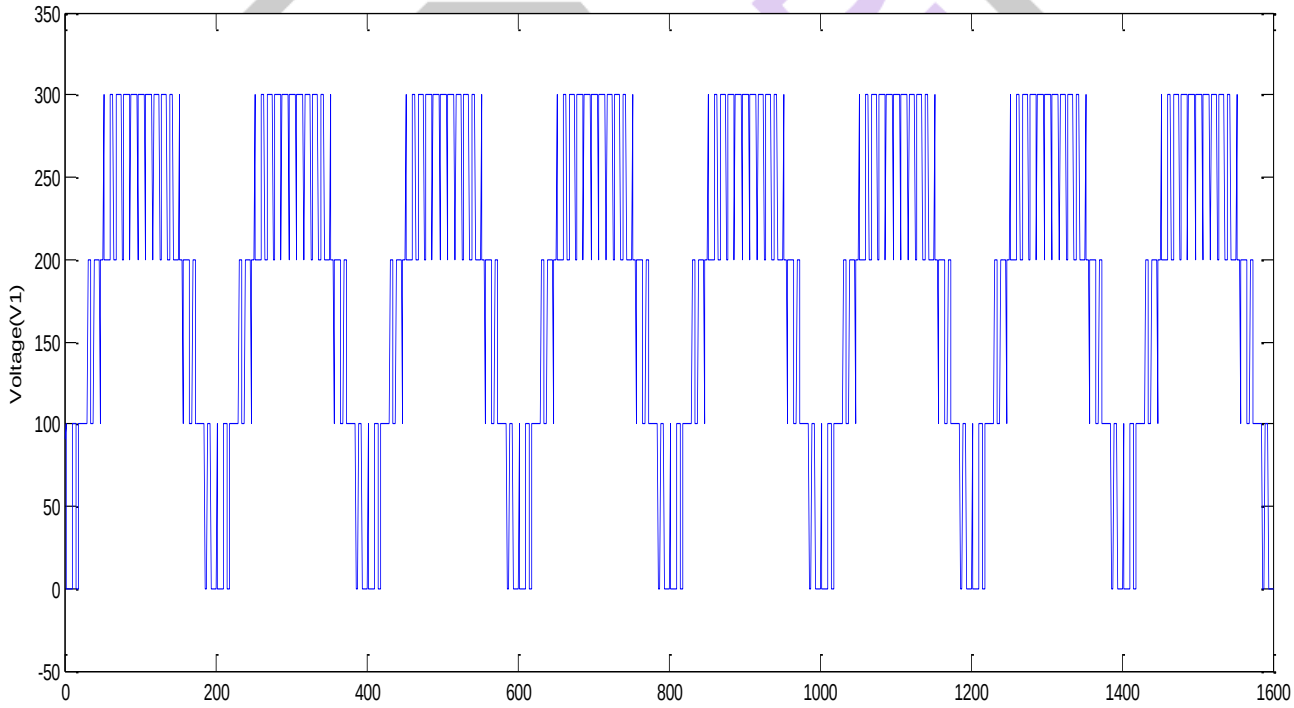

Fig. DC level waveform of seven level Inverter

(B)Output waveform of pv system

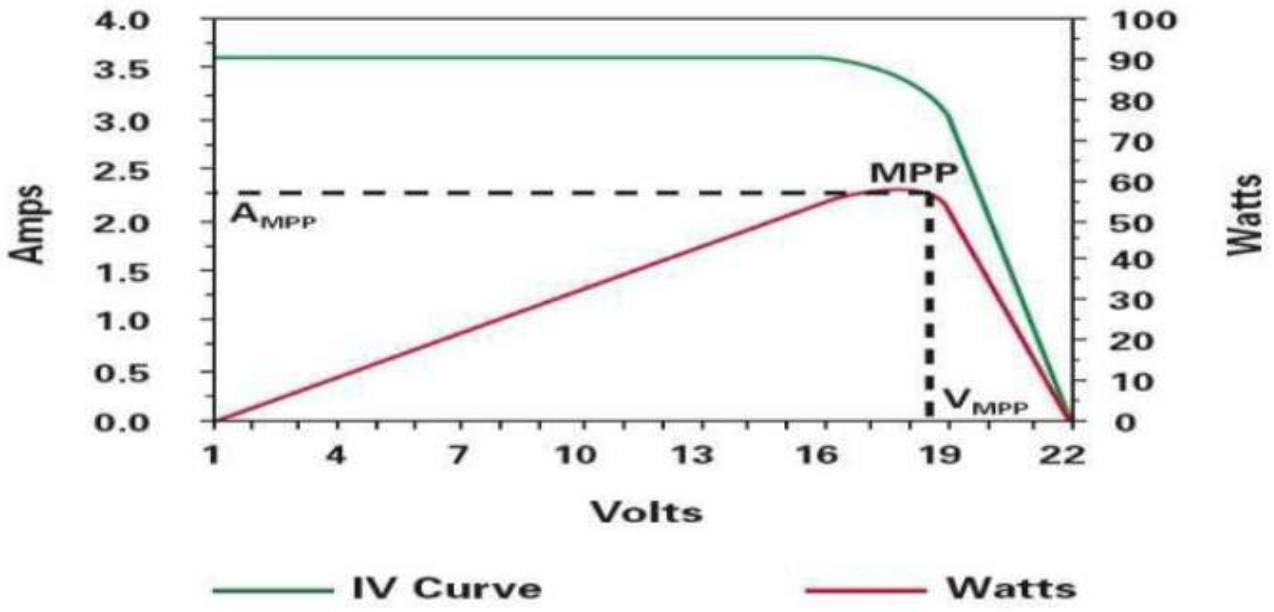

Fig. V-I and P-V characteristics curve of solar cell

(D)Output Waveform of MLI connected with spv system

This is the output voltage waveform of the Seven level Inverter

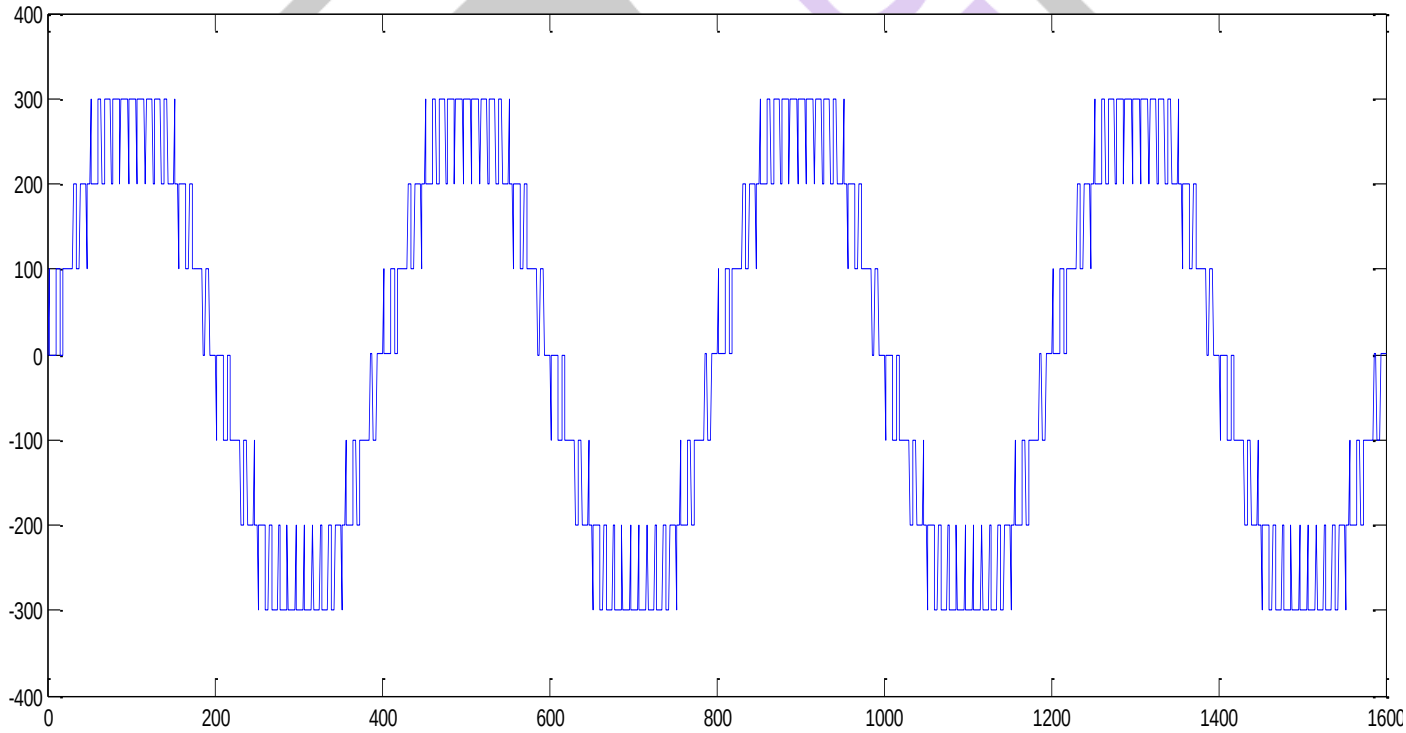

Fig. Output waveform of seven level Inverter with spv system

RMS VALUE OF OUTPUT VOLTAGE = 213.5

(E)FFT analysis of the Output voltage:

The fundamental frequency (50 Hz) = 296.5 and THD = 16.29%

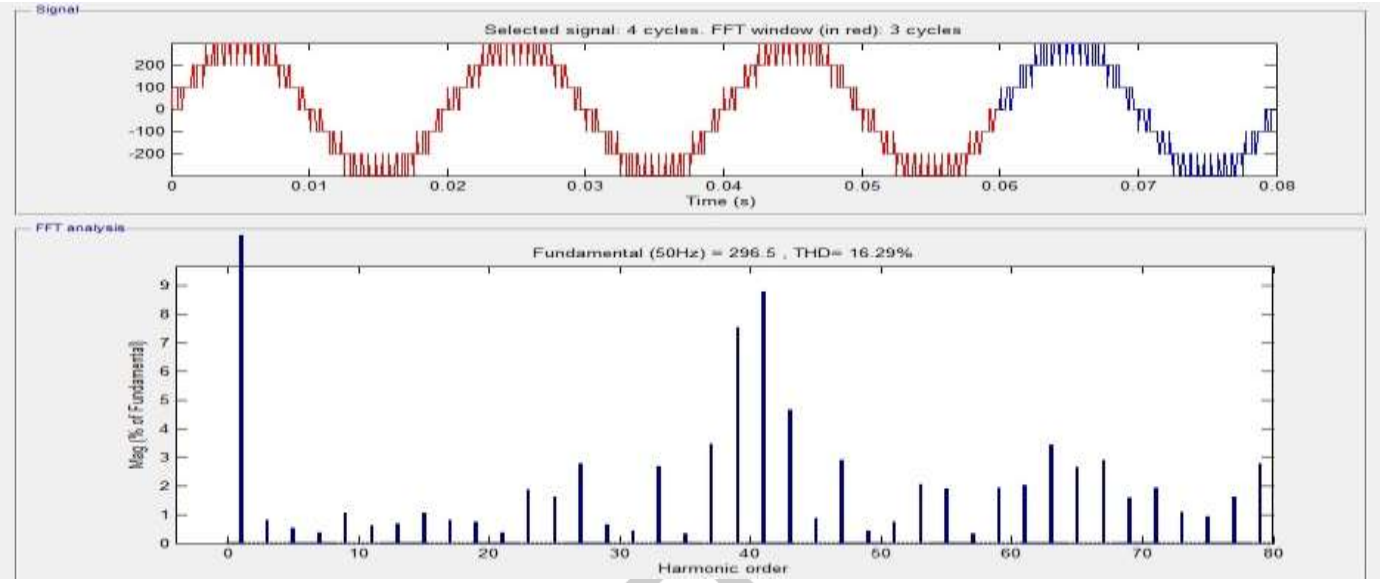

Fig. FFT of output voltage of seven level Inverter

(F)OUTPUT CURRENT:

This is the output current waveform of single phase Seven level Inverter.

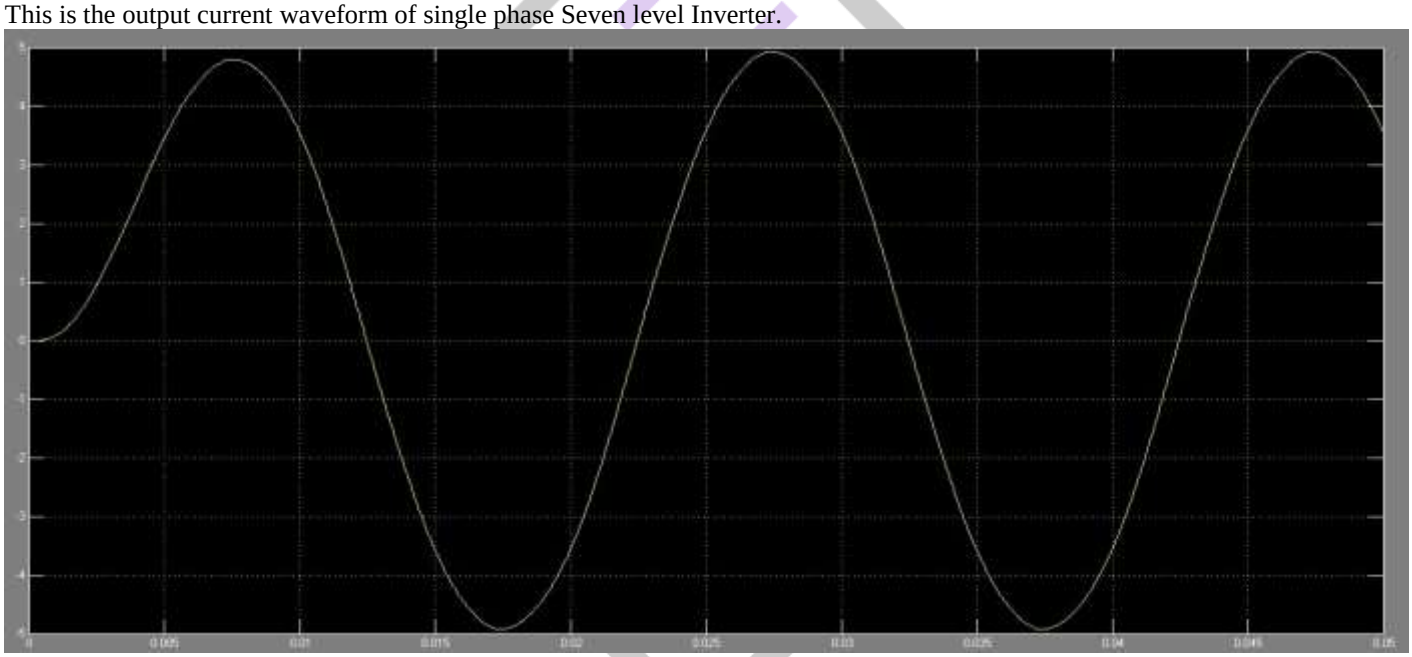

Fig. output current waveform of seven level Inverter

(G)FFT ANALYSIS OF OUTPUT CURRENT

The fundamental frequency (50 Hz) = 5.884 and THD = 3.530%

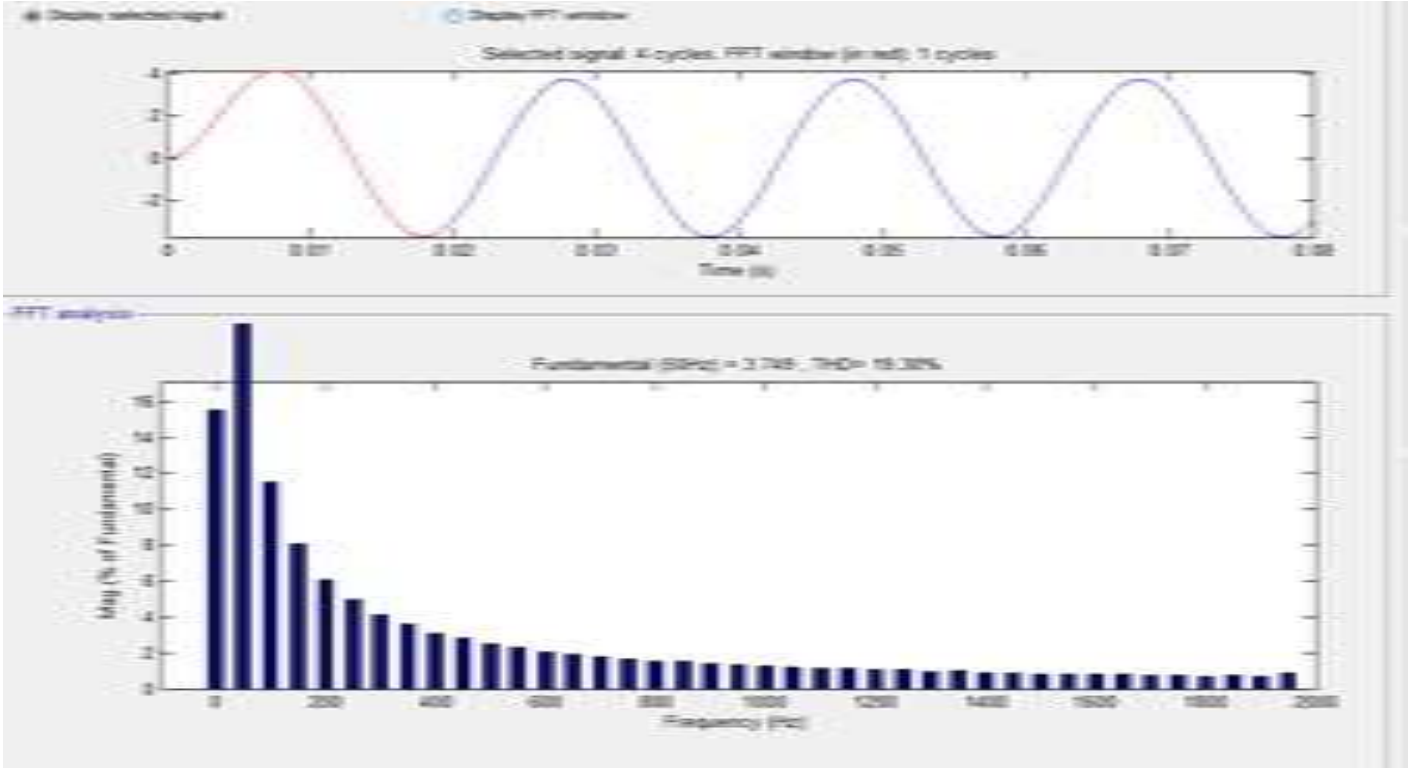

Fig. FFT analysis of output current of seven level Inverter

SCOPE FOR FUTURE WORK

- Implementation in Hardware.
- Implementation in Closed loop system.
- Implementation and simulation in three phase system.
- Implementation in Fuzzy logic.

CONCLUSION

In this paper, a new inverter topology has been introduced for grid connected spv system which has superior features over conventional multilevel inverter topologies in terms of the required power switches and isolated dc supplies, control requirements, cost, and reliability. It is shown that this topology could be a good candidate for converters used in high power applications for PV systems. In earlier PD SPWM technique, with diode clamped 7-level inverter, 6 carrier signals are required. While in proposed topology, only three carriers are required. The presented results clearly show that the proposed topology can work as a multilevel inverter with a reduced number of carriers for PWM generation. This will add up to the efficiency of the converter as well as decreasing the size and cost of the inverter.

ACKNOWLEDGEMENT

On the accommodation of the paper report of critical review of an inverter for grid connected photo voltaic (PV) generation system. We amplify our appreciation and genuine on account of my supervisor Asso. Prof. C.S. Sharma for their consistent inspiration and support during the course of our paper. We truly appreciate and value their esteemed guidance and encouragement from the beginning to the end of this paper.

REFERENCES

[1] s. Daher, j. Schmid, and f. L.m. Antunes, “multilevel inverter topologies for stand-alone pv systems,” ieee trans. Ind. Electron., vol. 55, no. 7, pp. 2703–2712,jul. 2008

[2] jeyrajselvaraj and nasrudin a. Rahim, senior member, ieee,” multilevel inverter for grid-connected pv system employing digital pi controller” ieee transac tions on
Industrial electronics, vol. 56, no. 1, january 2009.

[3] p. Venu gopal m tech (power electronics), vnr vjiet, professor and head, eee dept, vnr vjiet, “analysis and simulation of solar pv based multilevel converters
“international journal of professional engineering studies.
International journal of innovations in engineering research and technology [ijiert] issn: 2394-3696 volume 2, issue 10, oct.-2015

[4] adilsarwar, mohammad s. J. Asghar, “simulation and analysis of a multilevel converter topology for solar pv based grid connected inverter” smart grid and renewable
Energy, 2011, 2, 56-62 doi:10.4236/sgre.2011.21007 published online february 2011.

[5] s. Naresh kumar*, s. Nareshsivakanth **, k. Siva kumar, "multi-level inverter for power quality improvement in renewable power generation system, international
Journal of engineering research & technology (ijert) vol.3 issue8, august-2014 ijert issn: 2278-018.
[6] reddaiah polisetty, nadendla sharief, gopi pasala, "simulation analysis of multi-level inverter for solar power applications "international journal of advanced electrical and electronics engineering, (ijaeee).
[7] karthika n, sangari a, uma maheswari r "performance analysis of multi-level inverter with dc link switches for renewable energy resources" international journal of innovative technology and exploring engineering (ijitee) issn: 2278-3075, volume-2, Issue-6, may 2013.
[8] ieee transactions on industrial electronics, vol. 53, no. 5, october 2006 interfacing renewable energy sources to the
Utility grid using a three-level inverter salvador alepuz, member, ieee, sergio busquets-monge, student member, ieee, josep bordonau, member, ieee, javier gago, david gonzález, member, ieee, and josep balcells, member, ieee [9] ieee transactions on industrial electronics, vol. 61, no. 1, january 2014 optimal multiobjective design of hybrid active
Power filters considering a distorted environment ahmed faheem zobaa, senior member, ieee
[10]ieee transactions on power electronics, vol. 31, no. 4, april 2016 power and voltage balance control of a novel three-phase solid-state transformer using multilevel cascaded h-bridge inverters for microgrid applications liang wang, student member, ieee, donglai zhang, member, ieee, yi wang, member, ieee, bin wu, fellow, ieee, and hussain s. Athab, senior member, ieee.