Design, Analysis and Optimization of heavy duty Excavator bucket by using Finite Element Analysis

[1]Sharanagouda A Biradar, [2] B.B. Kottursheitar, [3]Gurudatta N Vernekar, [4]Bharatkumar A Biradar

[1]Research Scholar, [2]Head, Department of mechanical Engineering, [3]Research Scholar, [4]Research scholar
School of Mechanical Engineering
KLE Technology University, Hubballi, Karnataka

***Abstract*: Heavy duty excavator machines are high power machines used in the mining, agricultural and construction industry whose principal functions are digging (material removing), ground leveling and material transport operations. Heavy duty excavators are operated during the excavation process the unknown resistive forces offered by the terrain to the bucket teeth is transformed to the other parts of the bucket. An excessive amount of these forces adversely affected on the bucket therefore, the optimization of the bucket is done on the maximum breakout forces which are exerted on it during operation. The backhoe attachment is subjected to static as well as dynamic forces. This project work includes the volume capacity of the bucket, digging forces calculation according to the standards, static force analysis and optimization of bucket attachment of an excavator. In this work, we have considered four different materials such as AISI 4140, AISI 1040, SAILMA 450 HI and HARDOX 400. Static analysis is carried out and according to topology optimization results, the material is removed from the regions where there is less stress concentration. The weight optimization is done around 14.90% by using AISI 4140, 15.60% by using AISI 1040, 15.90% by using SAILMA 450HI, 15.33% by using HARDOX 400, but this increment in stress, as well as deformation of bucket linkage, is within permissible limit. The objective of this work is to model an excavator bucket by using CATIA V5 R21 software. Model is imported through ANSYS 18.0 software for meshing and analysis.**

***Keywords*: Digging forces, Heaped capacity, Struck capacity, Static force analysis, Finite element analysis, Optimization. Ansys 18 and Catia V5 R21.**

---

1. INTRODUCTION

All An excavator is a heavy equipment, that is usually used in mining work, construction work and work that required lifting too heavy for human beings. Excavators are heavy duty earth moving machines and commonly used for excavator tasks. During the operational life of the excavator, several resistive forces are offered by the surfaces to the bucket teeth. The large value of these resistive forces causes the failure of machine parts. Failure of tooth generally occurs due to impact, wear, and abrasion. The construction of highway, digging of trenches, holes, and foundation requires rapid removal of the soil. Typically digging machines such as backhoe loaders or known as backhoe excavators, and hydraulic excavators are used to digging the earth for these applications and to load the material into the dump trucks, or trolleys. Backhoe excavators are used primarily to excavate below the natural surface of the ground on which the machine rests. According to forestry, earthmoving and excavator statistics program (FEE statistics committee, 2010), a backhoe excavator is defined as "A ride-on dual purpose self-propelled wheeled machine for on and off-road operation". One end with loader arms that can support a full-width bucket or attachment and the other end incorporating a boom and arm combination capable of swinging half circle for the purpose of digging or attachment manipulation. In other words, a backhoe excavator is actually three pieces of construction equipment combined into one unit. These three pieces are a tractor, a loader, and a backhoe.

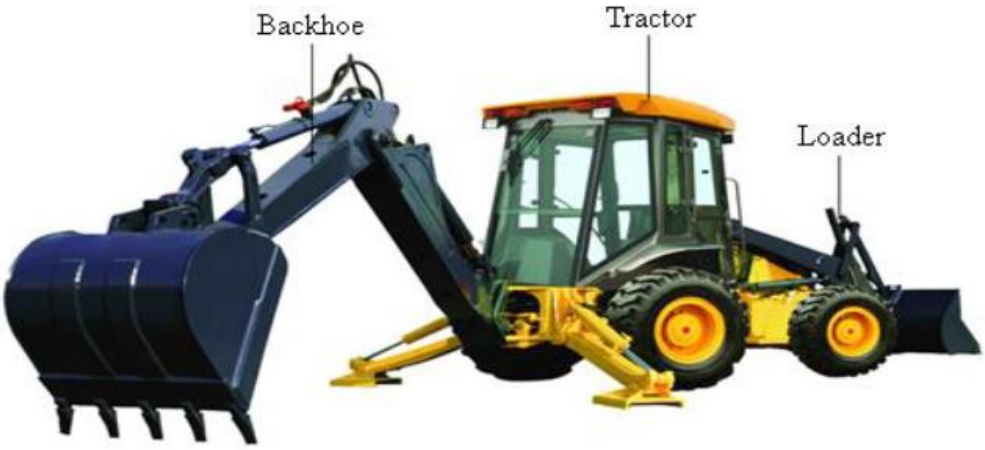

Fig 1: Backhoe excavator

2. BUCKET CAPACITY CALCULATIONS

The Bucket capacity is a measure of the maximum volume of the material that can be accommodated inside the bucket of the backhoe excavator. Bucket capacity can be either measured in struck capacity or heaped capacity.

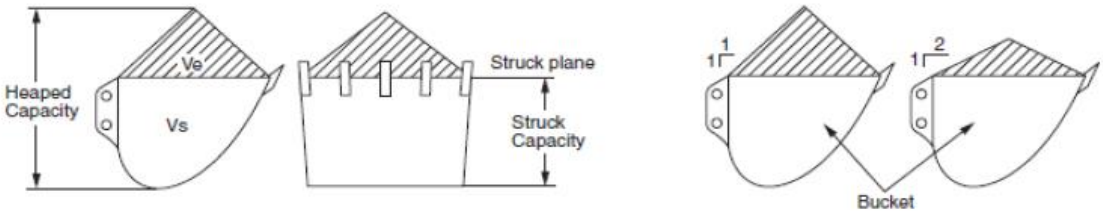

Fig 2: Bucket struck and heaped capacities

According to SAE standard the bucket capacity calculation is calculated for the proposed 3D model as shown below.

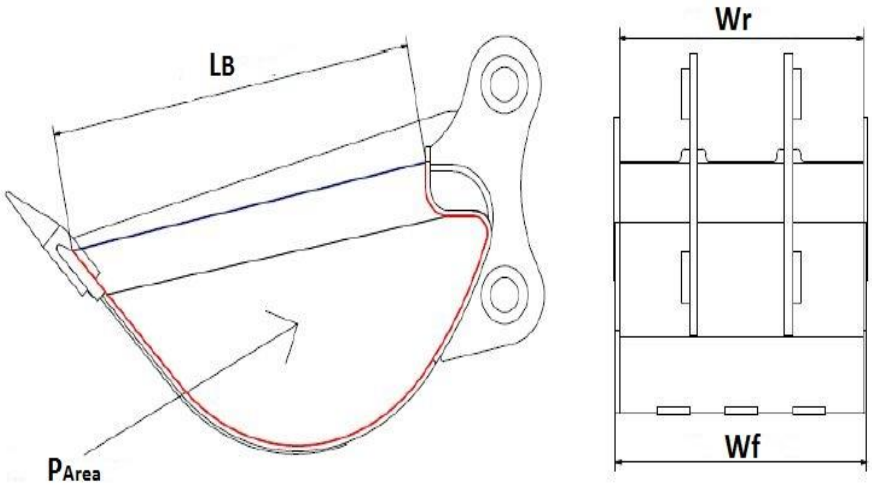

Fig 3: Parameters of the proposed 3D bucket model to calculate the bucket capacity

Parameters shown in fig 3 are measured and calculated which are given below:

L_B = 982 mm, P_{Area}= 659336.718 mm^2, W_f= 931 mm, W_r= 881 mm

the heaped capacity v_h can be given as,

Heaped capacity $v_h = v_s + v_e$ (1)

Where,

v_s is the struck capacity, v_e is the excess material capacity heaped,

Struck capacity v_s can be given from below equation

$$v_s = P_{Area}\left[\frac{W_f+W_r}{2}\right] \quad (2)$$

$v_s = 597.35 \times 10^6$ mm^3

Excess material capacity v_e for angle of repose 1:1 according to SAE J296 standard as shown in Fig 3.

$$v_e = \left[\frac{L_B W_f^2}{4} - \frac{W_f^3}{12}\right] \quad (3)$$

$= 145.54 \times 10^6$ mm^3

$$v_h = v_s + v_e \quad (4)$$

$v_h = 0.74$ m^3

The total volume of the bucket is 0.74 m^3 as calculated as shown in equation 4.

3. BUCKET DIGGING FORCE CALCULATION ACCORDING TO STANDARD SAE J1179

Bucket penetration into a material is achieved by the bucket curling force (F_B) and arm crowd force (F_S). The rating of these digging forces is set by SAE J1179 standard "Surface Vehicle Standards - Hydraulic Excavator and Backhoe Digging Forces" (SAE International, 1990). These rated digging forces are the forces that can be exerted at the outermost cutting point (that is the tip of the bucket teeth). These forces can be calculated by applying working relief hydraulic pressure to the cylinders providing the digging force.

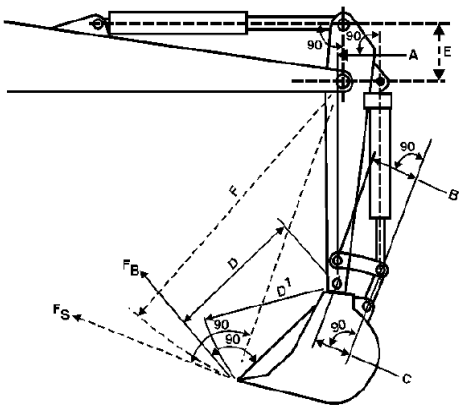

Fig 4: Determination of digging forces by following the standard SAE J1179

Fig 4 shows the bucket measurement of curling force F_B, arm crowd force F_S, the other terms in the figure A, B, C, D, D^1, E and F shows the distances.

Where,
A = 510 mm, B = 505 mm, C = 362 mm, D = 1270 mm, E = 600 mm, F = 1270+ 1870 = 3140 mm, working pressure(P) = 21 MPa, $D_A = D_B = 80$ mm

3.1 Radial tooth force due to bucket cylinder or bucket curling force (F_B)

According to SAE J1179 standard, maximum radial tooth force due to bucket cylinder (bucket curling force) F_B is the digging force generated by the bucket cylinder and tangent to the arc of radius D^1. The bucket shall be positioned to obtain maximum output moment from the bucket cylinder and connecting linkages. F_B becomes maximum when distance A reaches maximum, because rest of the distances in the equation (5) are constant.

$$F_B = \frac{P \times (\frac{\pi}{4}) D_A^2}{D} \times \frac{A \times C}{B} \quad (5)$$

$$F_B = 30.38 \times 10^3 \text{ N}$$

Equation (5) determines the value of the bucket curl or breakout force in N.

3.2 Maximum radial tooth force due to arm cylinder (F_s)

Maximum tooth force due to arm cylinder is the digging force generated by the arm cylinder and tangent to arc of radius F. The arm shall be positioned to obtain the maximum output moment from the arm cylinder and the bucket positioned as described in the case of maximum bucket curl force (Max. bucket tangential force). While calculating maximum force F_S occurs, when the axis in the arm cylinder working direction is at a right angle to the line connecting the arm cylinder pin and the boom nose pin as shown in Fig. 4.

$$F_S = \frac{P \times (\frac{\pi}{4}) D_B^2}{F} \times E \quad (6)$$

Where, F = bucket tip radius (D) + arm link length

F = 1270 + 1870

= 3140 mm

$$F_S = \frac{21 \text{ X } 0.7855 \text{ X } 80^2}{3140} \times 600$$

$$F_S = 20.17 \times 10^3 \text{ N}$$

Equation (6) determines the radial tooth force in N.

4. BUCKET STATIC FORCE ANALYSIS

By considering maximum force out of two calculated forces the design load can be calculated as,

By considering load factor as 2

Design Load = Load factor × F_B

= 2 × 30

= 60 KN

Fig 5 shows the free body diagram of the bucket. As can be seen the reaction force on the bucket teeth at point B4 due to the breakout force 60 KN acts at the angle 39.007° for configuration of the maximum breakout force condition.

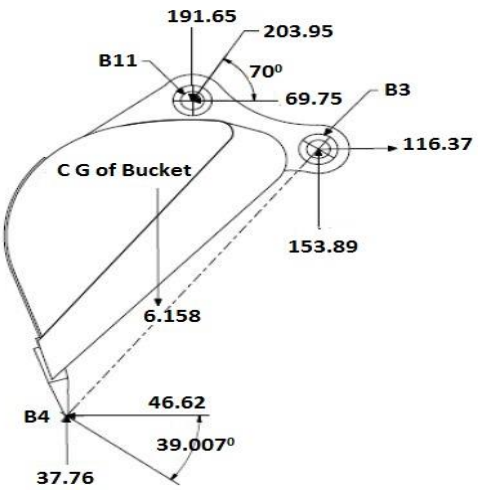

Fig 5: Free body diagram of Bucket in KN

Table 1: Static forces on the bucket joint

Bucket Joints	Forces (KN)	
	Horizontal Component	Vertical component
F_4	-46.62	37.76
F_{11}	-69.75	-191.65
F_3	116.37	153.89

The force acting on leftward direction for horizontal component of the force which are shown by negative sign and downward direction for vertical component of the force which are show by positive sign as shown in table 1.

5. CAD MODELLING

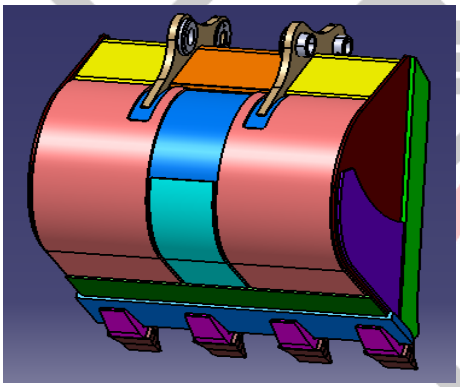

Fig 6(a): 3D model of bucket

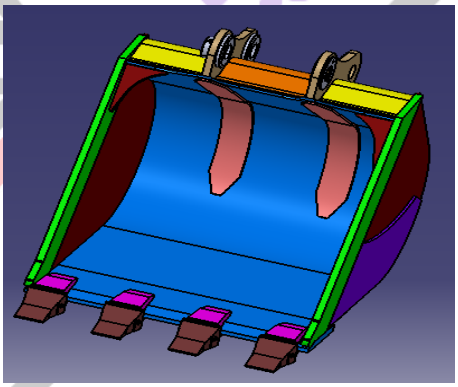

Fig 6(b): 3D model of bucket

The CAD model has been prepared in CATIA V5 R21. Calculations are done for finding the forces acting on excavator bucket. The finite element analysis is carried out by using ANSYS 18.0.

6. FEA PROCEDURE IN ANSYS

The following procedure is used for an excavator bucket analysis in ANSYS:

- **Import the 3D model:** 3D model is imported in to the ANSYS through IGES file format.
- **Define materials:** Specify the materials to the 3D model of an excavator bucket for simulation. ANSYS gives a chance to change the material for each part, for conduction different simulations.
- **Apply constraints:** The displacement of the model should be limit by restricting the structural constraints. for example, one should remove rigid motions for static simulation.
- **Apply loads:** The loads are nothing but forces which are applied to an assembly for the simulation. These forces create stresses and deformations in the assembly.
- **Specify contact conditions**
- **Meshing**
- **Results**

6.1 Selection of materials

Material selection is one of the most important and critical steps in the structural or mechanical design process. Meanwhile, the bucket is working at critical conditions like very high impact load acts on the bucket while in operation and more wear of the parts. The material selection depends on the properties like Young's modulus, density, Poisson's ratio, yield strength and ultimate strength. For an excavator bucket, the following are the materials have been used i.e. AISI 4140, AISI 1040, SAILMA 450 HI and HARDOX 400. The best material is chosen for an excavator bucket based on cost wise and performance wise which suits the application.

Table 2: Material properties for different materials

Material name	Young's modulus (GPa)	Poisson's ratio	Density (Kg/mm^3)	Yield strength (MPa)	Tensile strength (MPa)
AISI 4140	210	0.27	7850	415	655
AISI 1040	205	0.29	7870	435	670
SAILMA 450 HI	210	0.3	7900	450	700
HARDOX 400	210	0.29	7474	1000	1250

6.2 Meshing

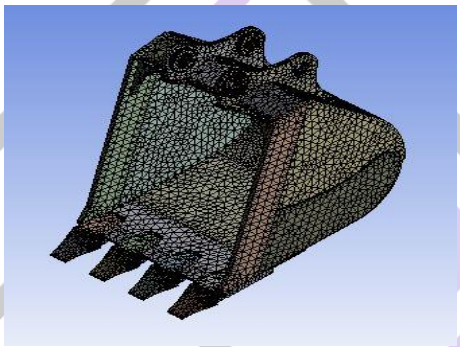

Fig 7: Meshed view of a bucket

The meshing of the bucket in done in ansys 18.1 software. Solid Tetrahedon is used as a element for the bucket model and 20mm as a element size is shown in above fig 8.

Table 3: Represents the number of nodes and elements of bucket model

Element Type	Trails	Number of Nodes	Number of Elements
Solid Tetrahedron	Before optimization	194828	96437
	After optimization	188143	92923

6.3 Load and boundary condition

In order to carry static structural analysis for an excavator bucket initially, we need to apply loads and boundary condition. Boundary conditions are nothing but constraining the degrees of freedom on a model. The boundary condition is made based on the real-life situations.

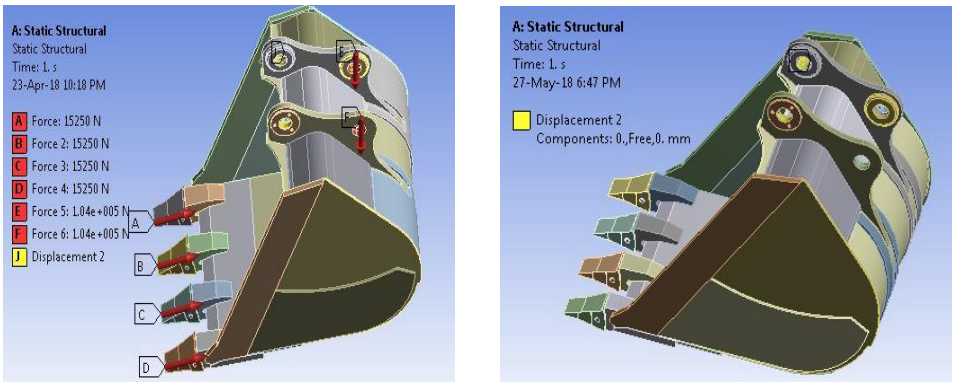

Fig 8: Forces and constraints applied

6.4 Analysis of an excavator bucket

Static structural analysis was performed for an excavator bucket in order to see the stresses are within the limits. Structural optimization is performed for an excavator bucket in order to reduce the weight.

Von Misses stresses is used as a criterion in determining the onset of failure in ductile materials, and the materials in the presented study for the parts of the bucket are of ductile materials, so the design of all parts should be on the basis of Von Misses stresses acting on the parts. The failure criterion states that the Von Misses stresses σ_{VM} should be less than the yield stresses σ_y of the material by taking appropriate safety factor (1.5) into consideration. This indicates for the design of a part to be safe or safe working stress, the following condition must be satisfied

$$\text{Safe working stress} = \frac{\text{Yield stress}}{\text{Factor of safety}}$$

The backhoe parts get deformation as the load applied on them. The deformation or displacement of the backhoe part should be less than that of the minimum thickness of plate used in the parts of backhoe attachment to be analyzed for safe stress condition. The next section presents the FE analysis of the bucket.

6.4.1 Analysis results obtained before optimization

➢ **For AISI 4140 Material**

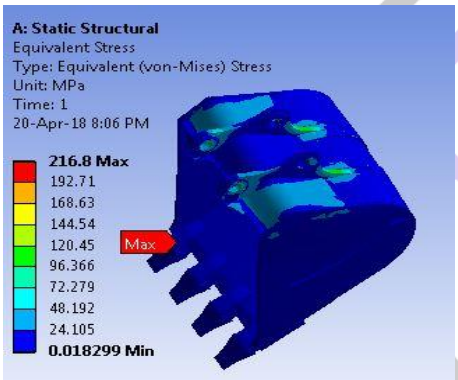

Fig 9(a): Stress in the bucket

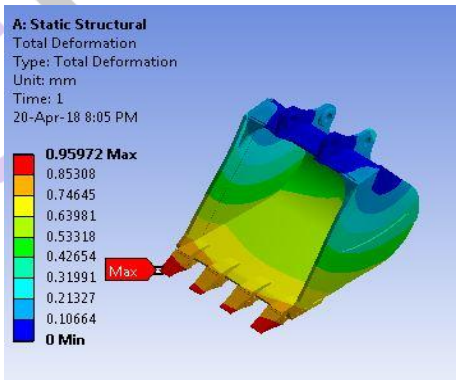

Fig 9(b): Displacement in the bucket

The max stress obtained is 216.8 MPa which means the design is safe. The maximum deformation is found to be 0.95972 mm which is very less.

➢ **For AISI 1040 Material**

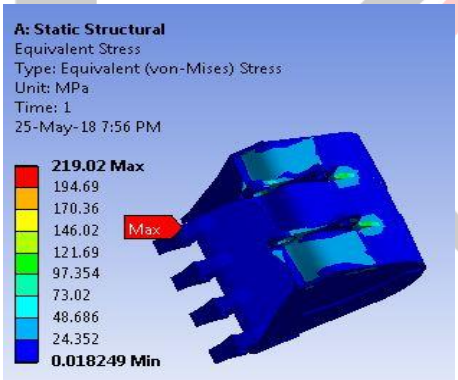

Fig 10(a): Stress in the bucket

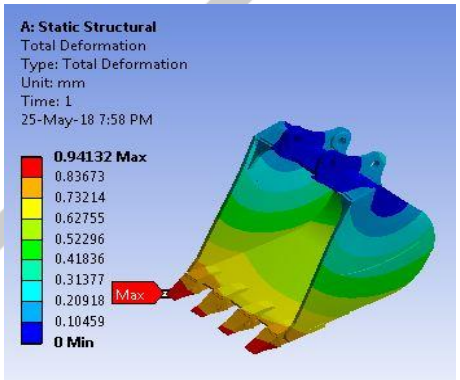

Fig 10(b): Displacement in the bucket

The max stress obtained is 219.02 MPa which means the design is safe. The maximum deformation is found to be 0.94132 mm which is very less.

➢ **For SAILMA 450 HI Material**

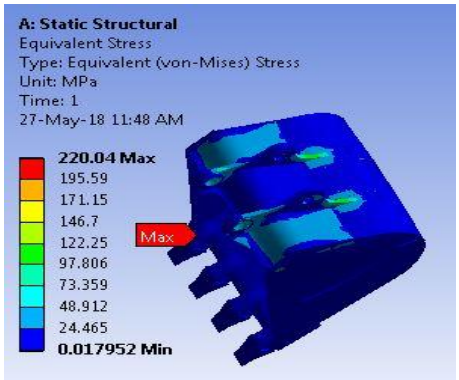

Fig 11(a): Stress in the bucket

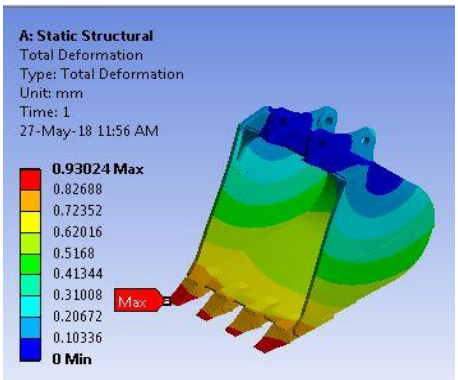

Fig 11(b): Displacement in the bucket

The max stress obtained is 220.04 MPa which means the design is safe. The maximum deformation is found to be 0.93024 mm which is very less.

➢ **For HARDOX 400 Material**

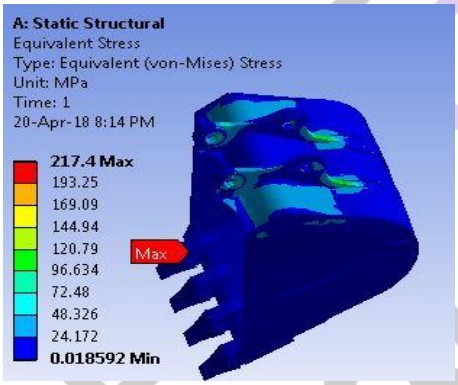

Fig 12(a): Stress in the bucket

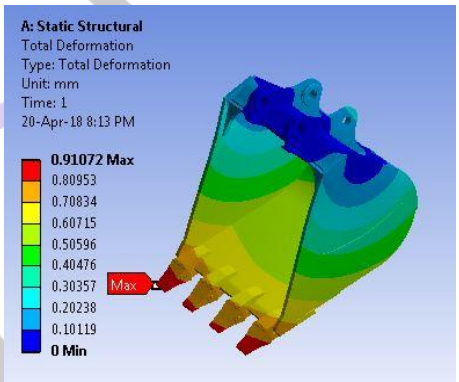

Fig 12(b): Displacement in the bucket

The max stress obtained is 217.4 MPa which means the design is safe. The maximum deformation is found to be 0.91072 mm which is very less.

6.4.2 Analysis results obtained after optimization

➢ **For AISI 4140Material**

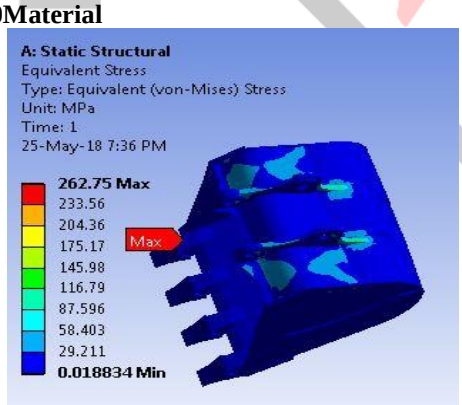

Fig 13(a): Stress in the bucket

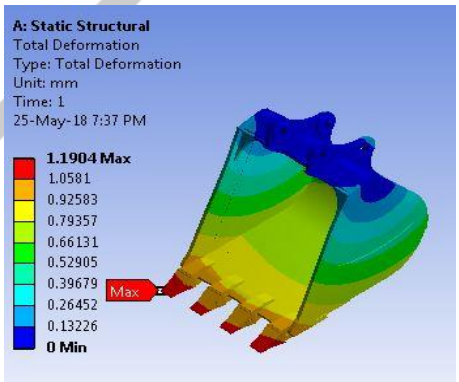

Fig 13(b): Displacement in the bucket

The max stress obtained is 262.75 MPa which means the design is safe. The maximum deformation is found to be 1.1904 mm which is very less.

- **For AISI 1040 Material**

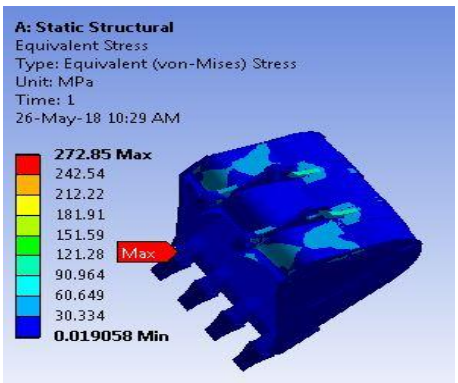

Fig 14(a): Stress in the bucket

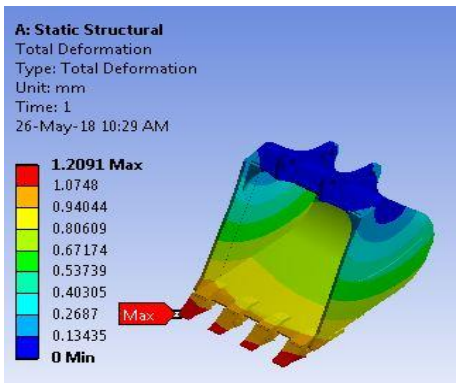

Fig 14(b): Displacement in the bucket

The max stress obtained is 272.85 MPa which means the design is safe. The maximum deformation is found to be 1.2091 mm which is very less.

- **For SAILMA 450 HI Material**

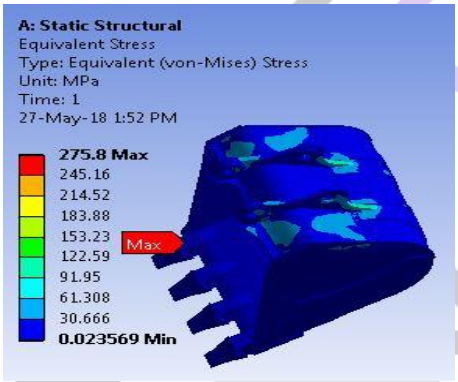

Fig 15(a): Stress in the bucket

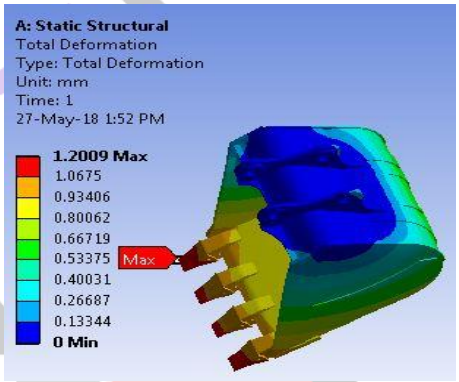

Fig 15(b): Displacement in the bucket

The max stress obtained is 275.8 MPa which means the design is safe. The maximum deformation is found to be 1.2009 mm which is very less.

- **For HARDOX 400 Material**

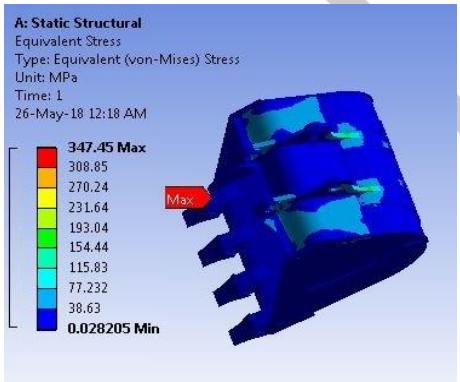

Fig 16(a): Stress in the bucket

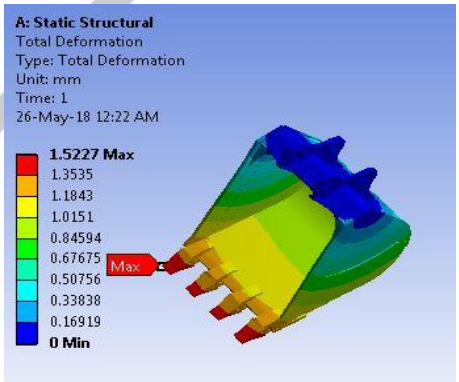

Fig 16(b): Displacement in the bucket

The max stress obtained is 347.45 MPa which means the design is safe. The maximum deformation is found to be 1.5227 mm which is very less.

7. Results and Discussion

Table 4: Iterations result for AISI 4140 material

Trial No.	Material	Total Deformation(mm)	Von-mises Stress (MPa)	Mass (Kg)	Safe working Stress (MPa)
Before optimization	AISI 4140	0.95972	216.8	623.17	276.67
After optimization		1.1904	262.75	530.24	

So, the results obtained for AISI 4140 material as shown in table 4 are within stress limit of 277 MPa. Hence, we can reduce weight of an excavator bucket up to 14.90 %. So that we can use less material at the manufacturing time, reducing expenditure on the material and also the overall manufacturing cost of an excavator bucket.

Table 5: Iterations result for AISI 1040 material

Trial No.	Material	Total Deformation(mm)	Von-mises Stress (MPa)	Mass (Kg)	Safe working Stress (MPa)
Before optimization	AISI 1040	0.94132	219.02	627.78	290
After optimization		1.2091	272.85	529.81	

So, the results obtained for AISI 1040 material as shown in table 5 are within stress limit of 290 MPa. Hence, we can reduce weight of an excavator bucket up to 15.60 %. So that we can use less material at the manufacturing time reducing expenditure on the material and also the overall manufacturing cost of an excavator bucket.

Table 6: Iterations result for SAILMA 450HI material

Trial No.	Material	Total Deformation(mm)	Von-mises Stress (MPa)	Mass (Kg)	Safe working Stress (MPa)
Before optimization	SAILMA 450HI	0.93024	220.04	627.14	300
After optimization		1.2009	275.80	527.31	

So, the results obtained for SAILMA 450HI material as shown in table 6 are within stress limit of 300 MPa. Hence, we can reduce weight of an excavator bucket up to 15.90 %. So that we can use less material at the manufacturing time reducing expenditure on the material and also the overall manufacturing cost of an excavator bucket.

Table 7: Iterations result for HARDOX 400 material

Trial No.	Material	Total Deformation(mm)	Von-mises Stress (MPa)	Mass (Kg)	Safe working Stress (MPa)
Before optimization	HARDOX 400	0.91072	217.4	593.23	667
After optimization		1.5227	347.45	502.24	

So, the results obtained for HARDOX 400 material as shown in table 7 are within stress limit of 667 MPa. Hence, we can reduce weight of an excavator bucket up to 15.33 %. So that we can use less material at the manufacturing time reducing expenditure on the material and also the overall manufacturing cost of an excavator bucket.

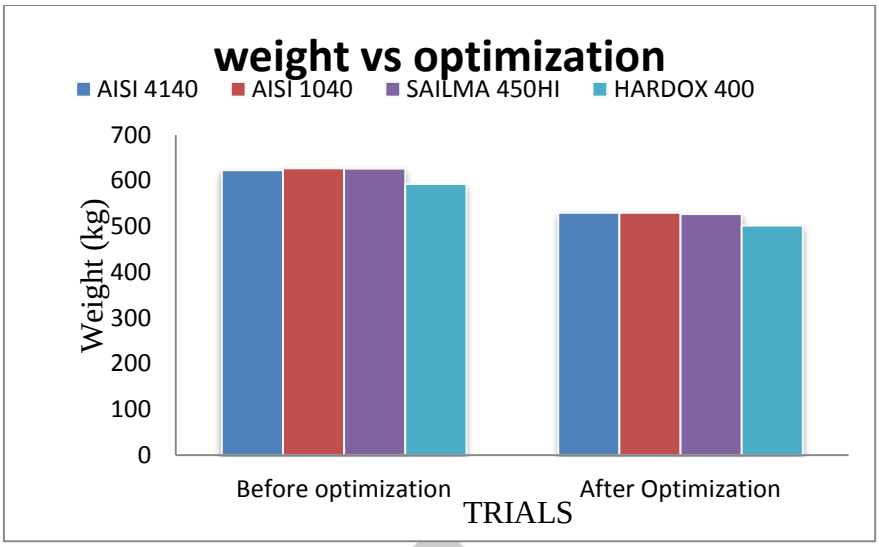

Fig 17: Graph of weight vs optimization

8. CONCLUSION

We designed an excavator bucket by using CATIA V5 R21 software and analysis is done by ANSYS 18.1 software. The forces acting on the excavator bucket teeth are calculated according to the standard SAE J1179 as 60 KN and also the bucket capacity is calculated according to the standard SAE J296 as 0.75 m^3. The stress at the tip of teeth of an excavator bucket is calculated. As per the above analysis, it is suggested that the bucket used for the excavation purpose should be properly checked for its application on the basis of the soil strata. Static structural analysis was performed for an excavator bucket in order to see the stresses are within the limits. The bucket weight can be optimized successfully by decreasing the various bucket parts thickness. The weight reduction of bucket is about 14.90 % by using AISI 4140 material. The weight reduction of bucket is about 15.60 % by using AISI 1040 material. The weight reduction of bucket is about 15.90 % by using SAILMA 450HI material. The weight reduction of bucket is about 15.33 % by using HARDOX 400 material. The analysis results conclude that more weight reduction can be obtained from the SAILMA 450HI material compare to other four materials. Finally, weight reduction is ultimately affecting the material used for making the model. So that we can use less material at the manufacturing time thus by this study we can save the expenditure on the material and also the overall manufacturing cost which is revolutionary in the field of an excavator.

REFERENCES

[1] Khedkar Y, Dey T and Padasalagi Y, "Study of forces acting on excavator bucket while digging," International journal of applied mechanical engineering, Vol. 06, No. 5, 2017, ISSN: 2168-9873.

[2] Patel BP, Prajapati JM, (2012) "Evaluation of bucket capacity, digging force calculations and static force analysis of mini hydraulic backhoe excavator" International journal of machine design, Vol. 04, page no. 59-66, 2012.

[3] Bennett N, Walawalkar A, Heck M, Schindler C, "Integration of digging forces in a multi-body-system model of an excavator". J Multi-Body dynamics PP.230, 2016.

[4] K.GunaSekhar, and P.Dileep Kumar, "Design and analysis of an excavator bucket," International journal and magazine of mngineering, technology, management and research., Vol. 04, No. 5, pp. 2348-4845, may 2017.

[5] Manisha P. Tupkar, Prof. S. R. Zaveri, "Design and analysis of an excavator bucket," International journal of Scientific research engineering & technology, Vol. 04, No. 3, pp. 2278 – 0882, March 2015.

[6] Mr. Kalpak. S. Dagwarand Prof. R.G. Telrandhe, "Failure analysis of excavator bucket tooth," International journal of scientific research and engineering Studies, Vol. 02 Issue 4, ISSN: 2349-8862, April 2015.

[7] Sujit Lomate, Siddaram Biradar, Ketan Dhumal, Amol Waychal, "Design and shape optimization of excavator bucket," International research journal of engineering and technology, Vol. 03, p-ISSN: 2395-0072, 08 Aug-2016.

[8] A.Shanmukheswar RAO, and S.Ananth, "Design, analysis and material optimization of excavator bucket teeth with different cross sections," Open Journal of technology & engineering disciplines, Vol. 2, No. 4, pp. 410 – 428, December 2016.

[9] Mr. Swapnil S. Nishane, Dr. S.C. Kongre, Prof. K.A. Pakhare, "Modeling and static analysis of backhoe excavator bucket,"International Journal of Research in advent technology, Vol.4, No.3, E-ISSN: 2321-9637, March 2016.

[10] Bhaveshkumar P. Patel, Jagdish m. prajapati, "Structural optimization of mini hydraulic backhoe excavator attachment using fea approach, "machine design, Vol.5, No.1, pp. 43-56, ISSN 1821-1259, 2013.