Design and development of stairs climbing robot using mems technology

[1]Suvasini D.Patil , [2]Dr.N.K.Choudhari, [3]Ms.D.M.Kate

[1]PG Student, [2]Professor, [3]Assistant Professor
Department of Electronics and Communication,
[1]Priyadarshini Bhagawati College of Engineering, Nagpur, India

***Abstract*: This paper presents a method of developing a stairs climbing robot with self balancing chair mounted on the top of the robot. It is one of the major task in the field of Mechatronics require a mechanical arrangement and electronics based control of the actuators using wireless technology. In most of the mechanism it is hard to maintain the slope position of the seat while carrying some goods on it, so taking in action all these condition the robot is to design and develop which will climb on the stairs and adjust themselves as per environmental condition.**

***Index Terms*— Robot, Accelerometer (MEMS), ATMega 16, Raspberry pi**

I. INTRODUCTION

The system is basically based on mechatronics used for developing a stair climbing robot with self adjustable attached seat on it based on MEMS (Micro Electro Mechanical System), CC2500 transreceiver and Raspberry pi. It is really one of the advance and necessary technology which will be implemented everywhere in future.

For self balancing of the seat designed will be controlled using accelerometer ADXL335 providing a good range of analog value of different calibration as per the co-ordinates. Robots employ different types of mechanisms for their locomotion.The synthesis of mechanisms is the very first step in any robot design depending upon its application.Each type of mechanism has its own strengths on which it can capitalize. Some of them usewheels, some use legs and so on. As developed stairs climbing robot which climbs on particular types of stairs but our motto is to developed a robot which climbs on almost all types of standard stairs which is used for lifting recurring loads like books, food grains etc. to store upper level, or even patients to move upper level is not an easy job, especially where there is no lifting facilities (elevator). More over, in most of the buildings in the world does not elevators or escalators. In this case human labors are considered to be the only solution. Labor is becoming costly in the developed countries, where growth rate is getting negative. This problem can be solved if a robot can lift loads while traveling through strains. The project introduces a new horizon for the transportation of the loads over the stair. Most of the buildings of the country are structurally congested and unavailing of elevator facility so it is difficult and laborious to lift up heavy loads. It is based on the Microcontroller-ATMega16 and wireless communication using CC2500-Transreceiver and Gesture.The intelligence for controlling the robot will be embedded on the AVR series microcontroller i.e.ATMega16.

II. LITERATURE SURVEY

1. Design of Low Cost Stair Climbing Robot Using Arduino
Jeyabalaji C et al. Int. Journal of Engineering Research and Applications ISSN : 2248-9622, Vol. 4, Issue 10(Part - 3), October 2014, pp.15-18 locomotion.
We are proposing a stair climbing robot that looks a lot like the human leg and can adjust itself according to the height of the step. But, we are currently developing a unit to carry payload of about 4 Kg. The automatic adjustment in the robot according to the height of the stair is done by connecting an Android device that has an application programmed in OpenCV with an Arduino in Host mode.

2. Design and development of adjustable stair climbing robot
K. Narendra Kumar1, A. Gopichand2, M. Gopala Anjaneyulu3, B. Gopi Krishna4 Apr-2013
Developments have been made on various kinds of stair climbers, considering how to make its climbing ability higher and its mechanical complexity reasonable and practical. The research includes realizing a large step negotiating. Reducing body weight and energy consumption is also the important matter of developing. We introduce some solutions to realize stair climbing machines that we developed. Each of them has good performance as in a category of their kind.

3. Design and Implementation of Stair-Climbing Robot for Rescue Applications "Basil Hamed"
International Journal of Computer and Electrical Engineering, Vol. 3, No. 3, June 2011
This paper presents the design and implementation of a feedback control system for an RF remote-controlled stair climbing robot. The robot is controlled using PIC 16F877A.The paper presents a complete integrated control architecture and communication strategy for a system of reconfigurable robots that can climb stairs. Its mechanical design is suitable with back wheel to drive the robot over rubble, and large wheels in the front driven by dc motor for climbing stair.

III. BLOCK DIAGRAM

3.1 Transmitter Section:

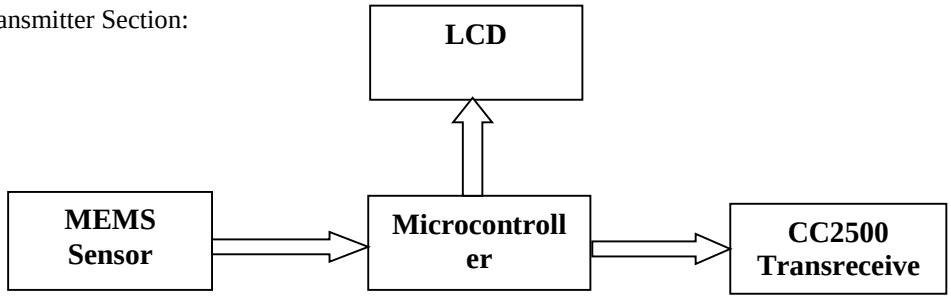

3.2 Receiver Section:

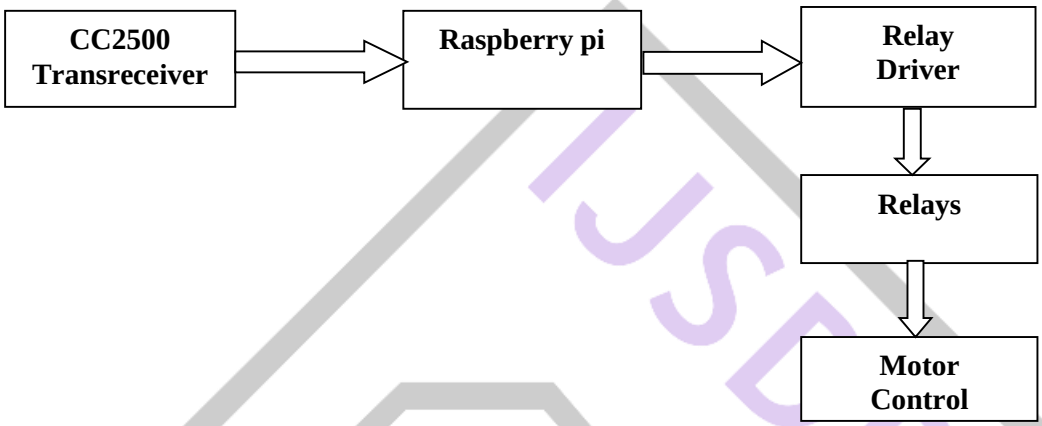

IV. TECHNOLOGY USED

I have used CC2500 Transreceiver Module for data communication, whereas Micrcontroller ATMega16 is used for processing the signal and Accelerometer is used for self balancing the seat attached on the system.

The major components are given below.

1) Raspberry pi
2) ATMega16 Micrcontroller
3) CC2500 Transreceiver Module
4) LCD-16x2 Display
5) Acrylic Sheet
6) DC Motor -10RPM
7) MDF
9) Track belts
10) DC Battery
11) Accelerometer ADXL335

4.1 What is a Gesture ?

A **gesture** is a form of non-verbal communication or non-vocal communication in which visible bodily actions communicate particular messages, either in place of, or in conjunction with, speech. Gestures include movement of the hands, face, or other parts of the body. Gestures differ from physical non-verbal communication that does not communicate specific messages, such as purely expressive displays, proxemics, or displays of joint attention.[1] Gestures allow individuals to communicate a variety of feelings and thoughts, from contempt and hostility to approval and affection, often together with body language in addition to words when they speak.

4.2 Microcontroller ATMega 16

The purpose of using AVR AT Mega microcontroller is its advantage of having inbuilt analog to digital converter (ADC) which are required to obtain feedback from the sensors. The AVR core combines a rich instruction set with 32 general purpose working registers. All the 32 registers are directly connected to the Arithmetic Logic Unit (ALU), allowing two independent registers to be accessed in one single instruction executed in one clock

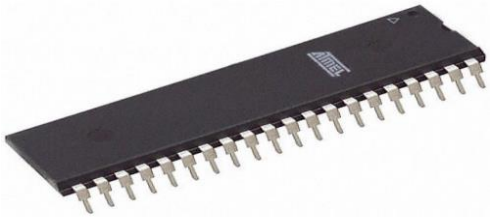

Fig.1

4.3 CC2500 Transreceiver

Fig.2

CC2500 RF Modem is a transceiver module which provides easy to use RF communication at 2.4 GHz. It can be used to transmit and receive data at multiple baud rates from any standard CMOS/TTL source. This module is a direct line in replacement for your serial communication it requires no extra hardware and no extra coding to turn your wired communication into wireless one. It works in Half Duplex mode i.e. it provides communication in both directions, but only one direction at same time (not simultaneously). This switching from receiver to transmitter mode is done automatically.

4.4 Accelerometer

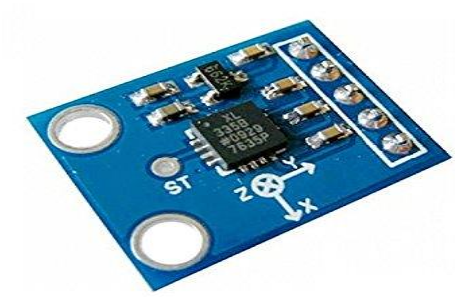

Fig.3

This Accelerometer module is based on the popular ADXL335 three-axis analog accelerometer IC, which reads off the X, Y and Z acceleration as analog voltages. By measuring the amount of acceleration due to gravity, an accelerometer can figure out the angle it is tilted at with respect to the earth. By sensing the amount of dynamic acceleration, the accelerometer can find out how fast and in what direction the device is moving. Using these two properties, you can make all sorts of cool projects, from musical instruments (imagine playing and having the tilt connected to the distortion level or the pitch-bend) to a velocity monitor on your car (or your children's car). The accelerometer is very easy interface to an Arduino Micro-controller using 3 analog input pins, and can be used with most other micro controllers, such as the PIC or AVR.

4.5 Raspberry pi

Fig.4

A Raspberry Pi is a credit card-sized computer The Raspberry Pi is slower than a modern laptop or desktop but is still a complete Linux computer and can provide all the expected abilities that implies, at a low-power consumption level. The Raspberry Pi is open hardware, with the exception of the primary chip on the Raspberry Pi, which runs many of the main components of the board–CPU, graphics, memory, the USB controller, etc.

4.6 LCD

Fig.5

LCD (Liquid Crystal Display) screen is an electronic display module and find a wide range of applications. A 16x2 LCD display is very basic module and is very commonly used in various devices and circuits. These modules are preferred over seven segments and other multi segment LEDs.

V. MECHANICAL DESIGN & FABRICATION

CAD Model

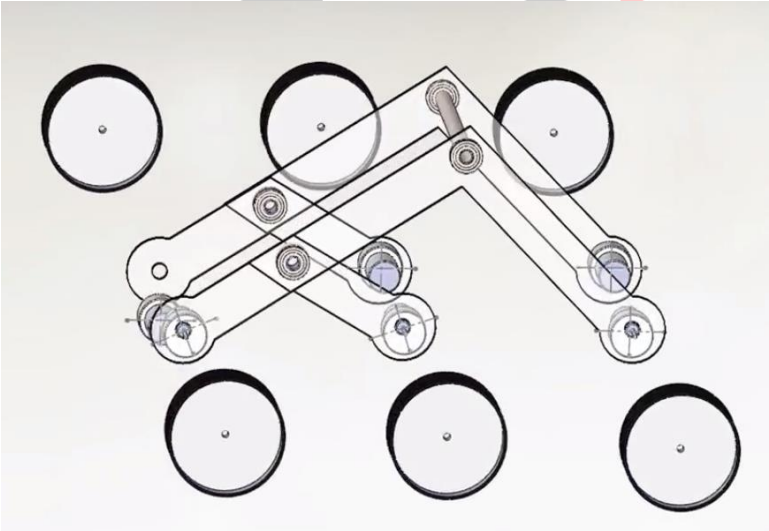

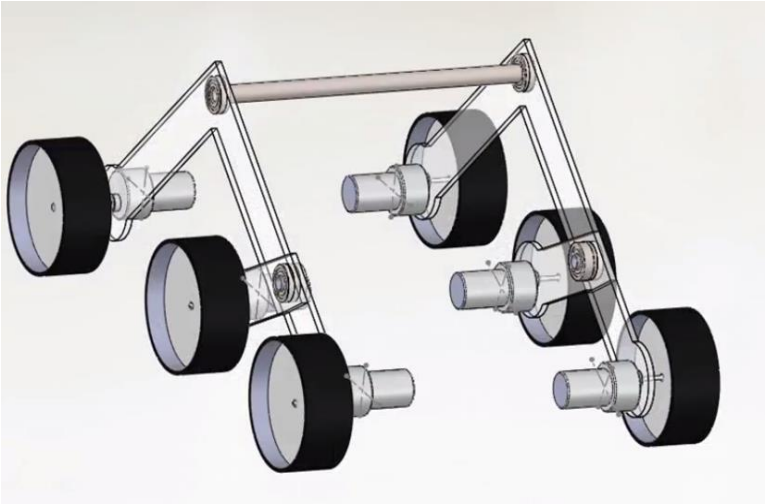

Fig .6

VI. RESULT

6.1 Hardware part

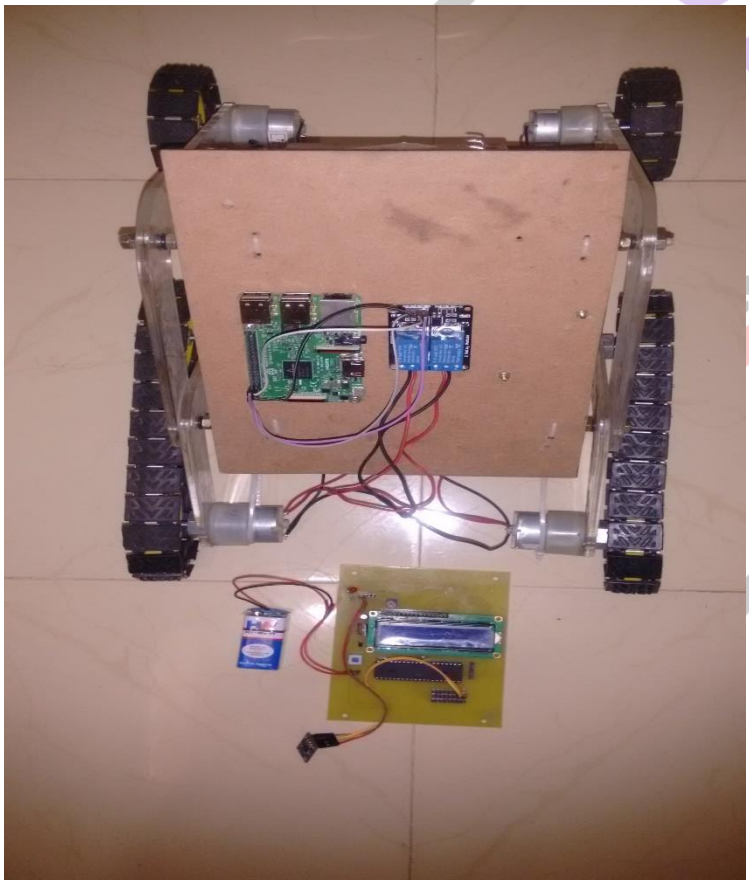

Fig.7 Developed Model

The four steps for climbing the stairs are

1. Robot wheel touches the step.
2. Lifting the front part of the robot.
3. Lifting the back part of the robot.

4. Following the above steps the robot proceeds.
5. It can also be used for descending of steps.

Thus we have successfully built stairs climbing robot with monitoring system

6.2 Methods of climbing

Step1

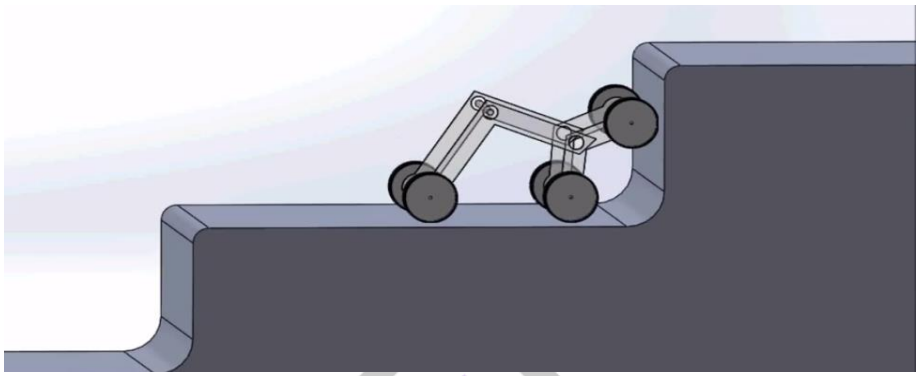

Fig.8 Robot wheel touches the step

Step2

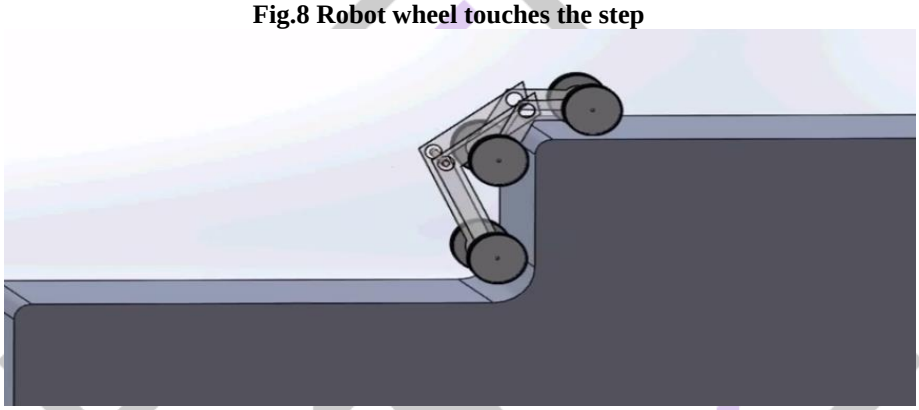

Fig.9 Lifting the Front part of the robot

VII. CONCLUSION

As per the proposed model, I have successfully completed the design and development of the stair climbing robot which can climbing very easily on stairs by balancing its chair attached on the system. The accelerometer attached with the circuit will define the analog values calibration for its balancing nature. where as CC2500 Transreceiver Module is the perfect hardware module for wireless communication network between transmitter and the receiver module. The mechanically designed and fabricated model is providing a good rigid structure for carrying the material from one place to other. Its controlling unit work on RISC structure, which will provide fast execution of the program embedded on it. Overall the developed model is working smoothly as per my research work.

REFERENCES

[1] Jeyabalaji C Design of Low Cost Stair Climbing Robot Using Arduino et al. Int. Journal of Engineering Research and Applications ISSN : 2248-9622, Vol. 4, Issue 10(Part - 3), October 2014, pp.15-18 locomotion

[2]]. K. Narendra Kumar1,A. Gopichand2, M. Gopala Anjaneyulu3, B. Gopi Krishna Design and development of adjustable stair climbing robot Apr-2013

[3] "Basil Hamed" Design and Implementation of Stair-Climbing Robot for Rescue Applications International Journal of Electrical Vol. 3, No. 3, June 2011

[4] Junzhi Yu, Min Tan, Shuo Wang, "Development of a Biomimetic Robots and Its Control Algorithm," in *IEEE TRANSACTIONS ON SYSTEMS, MAN, AND CYBERNETICS,* VOL. 34, NO. 4, AUGUST 2004.