Solar Power Fencing Based On Gsm Technology for Agriculture

Ms. Chaitali D. Khandar[1], Mr. Shyamkumar S. Patil[2], Mr. Nayan D. Dindekar[3], Ms.P.V. Raut[4]

[1,2,3]Student, [4]Assistant Professor
[1]Electical (E&P) Engg.DES'sCOETDmnRly.,Maharashtra, INDIA

***Abstract*: India, having vast agricultural lands has different crops ranging from paddy to tomato. Farmer face lots of trouble to save their crops from any wild animal and any human being interruption. This system provides protection using solar energy. Solar fencing is one of best way to provides protection against wild animal . It also reduce cost of protection. This agricultural solar fencing supply a low amount of current which cannot fully harm to any animal or human being. This system gives an electric current to those entering the fence area. It also enhance good safety to agriculture field and crops Solar Fencing Perimeter Protection is the modern day need to the growing security threat in denying, detecting while having the in built capability to serve as deterrent. This system design and implement Fencing Perimeter Protection for agriculture. It is the modern day need to the growing security threat. It works on Solar Energy with backup facility to run uninterruptedly during the nights as well as cloudy days. When any object is sensed by PIR or IR sensor, Immediately controller sends the message to the authorized person through the GSM modem, and it is interfaced with the controller. At the same time buzzer and light will on. We can use solar fencing for controlling motor.**

***IndexTerms*—Agriculture, Battery, Fence Wire, GSM Modem, Sensor, Solar Photovoltaic Cell.**

I. INTRODUCTION

Agriculture in India is the broadest economic sector and plays a significant role in the overall socio-economic factor of India. In such areas electric fencing system can be employed in which the animals experience a high voltage low current shock for a very short time. Usually, PIR sensors allow you to sense motion, almost always used to detect whether a human has moved in or out of the sensors range. They are small, inexpensive, low-power, easy to use and don't wear out. For that reason they are commonly found in appliances and gadgets used in homes or businesses. They are often referred to as PIR, "Passive Infrared" and "IR motion" sensors. A photoelectric sensor, or photo eye, is a device used to detect the distance, absence or presence of an object by using a light transmitter often infrared and a photoelectric receiver. They are used extensively in industrial manufacturing. There are three different functional types: opposed (through beam), R-reflective, and proximity-sensing (diffused). India has about 95 percent clear sunny days with average daily incidence of solar

The solar photovoltaic system has certain disadvantages as relatively high initial investment, requires storage devices. Solar energy available at a place is not a constant local weather conditions affect on its reception, it is not in concentrated form hence collection and concentrating surfaces are required. The solar photovoltaic (SPV) system converts the sunlight directly into DC voltage. The solar power fencing system provides both an economical a day's being efficiently used for electric fencing purpose. Solar-powered fencing-system enables the control of animals by giving them a short, sharp but safe shock which is sufficiently memorable that they never forget it. Farmers are always exposed to various external risks like weather dependence, market prices, inputs availability etc. Another potent risk for farming is damage to crops by stray/wild animals. For Himachal Pradesh more than wild animals the farmers are exposed to risk of crop damage from monkeys. To protect crops from monkeys', state government has devised various strategies like sterilizing the simians to resolve the problem; however, the problem still persists and needs alternative methods to protect the crops damage.

a) GSM Modem

A GSM modem is a specialized type of modem which accepts a SIM card, and operates over a subscription to a mobile operator, just like a mobile phone. From the mobile operator perspective a GSM modem looks just like a mobile phone. When a GSM modem is connected to a computer, this allows the computer to use the GSM modem to communicate over the mobile network. While these GSM modems are most frequently used to provide mobile internet connectivity many of them can also be used for sending and receiving SMS and MMS messages.

A GSM modem can be a dedicated modem device with a serial USB or Bluetooth connection or it can be a mobile phone that provides GSM modem capabilities. For the purpose of this document the term GSM modem is used as a generic term to refer to any modem that supports one or more of the protocols

Fig. 1.1: GSM Modem

b)Solar Panel

Solar panels absorb the sunlight as a source of energy to generate electricity or heat. Photovoltaic modules constitute the photovoltaic array of a photovoltaic system that generates and supplies solar electricity in commercial and residential applications. Each module is rated by its DC output power under standard test conditions (STC), and typically ranges from 100 to 365 Watts (W). A photovoltaic system typically includes an array of photovoltaic modules, an inverter, a battery pack for storage, interconnection wiring, and optionally a solar mechanism. In this project we use solar panel having rating is 12 V,6 watt.

c)Microcontroller

A microcontroller (or MCU for microcontroller unit) is a small computer on a single integrated circuit. In modern terminology, it is a system on a chip. A microcontroller contains one or more CPUs (processor cores) along with memory and programmable input/output peripherals. Program memory in the form of Ferroelectric RAM and ROM is also often included on chip, as well as a small amount of RAM. The ATmega16 microcontroller is used in this system which is a low-power CMOS 8-bit microcontroller based on the AVR enhanced RISC architecture.

II. EXPECTED IMPLIMENTATION OF A SYSTEM

The block diagram for the proposed system is given below in fig.

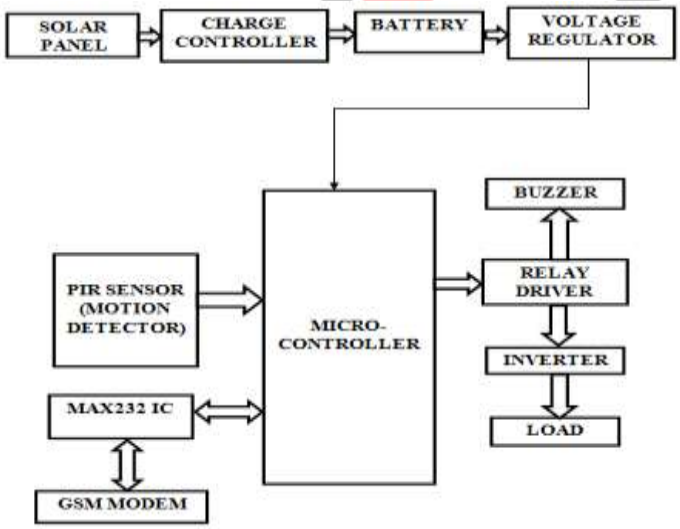

Fig. : Block Diagram of Solar Power Fencing Based on GSM Technology for Agriculture

a) PIR-Based Motion Detector

A PIR-based motion detector is used to sense movement of people, animals or other objects. They are commonly used in burglar alarms and automatically activated lighting systems. They are commonly called simply "PIR". Pairs of sensor elements

may be wired as opposite inputs to a differential amplifier. In such a configuration, the PIR measurements cancel each other so that the average temperature of the field of view is removed from the electrical signal; an increase of IR energy across the entire sensor is self-cancelling and will not trigger the device. This allows the device to resist false indications of change in the event of being exposed to brief flashes of light or field-wide illumination. (Continuous high energy exposure may still be able to saturate the sensor materials and render the sensor unable to register further information).

b) Voltage Regulator

The voltage regulator IC maintains the output voltage at a constant value and provides +5V regulated supply which is required for the microcontroller. It may be use to regulate one or more AC or DC voltages.

c) MAX232 IC

The MAX232 is a dual driver or receiver. It is an integrated circuit which converts the signals from RS232 serial port to the proper signal which are use in TTL compatible digital logic circuit. The drive increases the output voltage level from 5V supply to 7.5V by using external capacitor. It is mostly used in voltage level signal problems. This is use as a hardware layer converter like to communicate two systems simultaneously. It is helpful to understand what occurred to the voltage levels.

d) Battery

An electric batteryis a device consisting of one or more electrochemical cells with external connections provided to power electrical devices such as flashlights, smart phones and electric cars. When a battery is supplying electric power, its positive terminal is the cathode and its negative terminal is the anode. The terminal marked negative is the source of electrons that when connected to an external circuit will flow and deliver energy to an external device. When a battery is connected to an external circuit, electrolytes are able to move as ions within, allowing the chemical reactions to be completed at the separate terminals and so deliver energy to the external circuit.

e) Relay Driver

Relays are electromechanical devices which are used as a switch. Current flowing through the coil of the relay creates a magnetic field which attracts a lever and changes the switch contacts. The main advantages of using relay as a switch is that, they provide electrical isolation between inputs with the help of magnetic coupling and also we can handle a large power using a relay.

f) Buzzer.

A buzzer or beeper is an audio signaling device, which may be mechanical, electromechanical, or electronic. Typical uses of buzzers and beepers include alarms, timers and confirmation of user input such as a mouse click or keystroke.Buzzer is used in the system for indication purpose. It indicates its alert when the unwanted person comes in contact with the fence area.

III. WORKING PRINCIPLE

A solar panel is made up of a number of photovoltaic cells connected in series. Electricity is generated by these cells. Combined into a solar panel, these cells can produce enough voltage to charge a regular 12 volt battery. The solar panel ensures that the battery remains charged at all times. The battery stores the energy generated by the panel, and powers the energizer 24 hours a day. The energizer is the device which transform the low voltage current from battery to high voltage (upto 10,000 volts) current and send it to the electric fence. This way the fence is electrified and animals touching the fence receive the shock. Due to high voltage shock to the animals touching the fence, animals keep away from the fence and field is protected. The working of solar power fencing system is shown by fig. below.

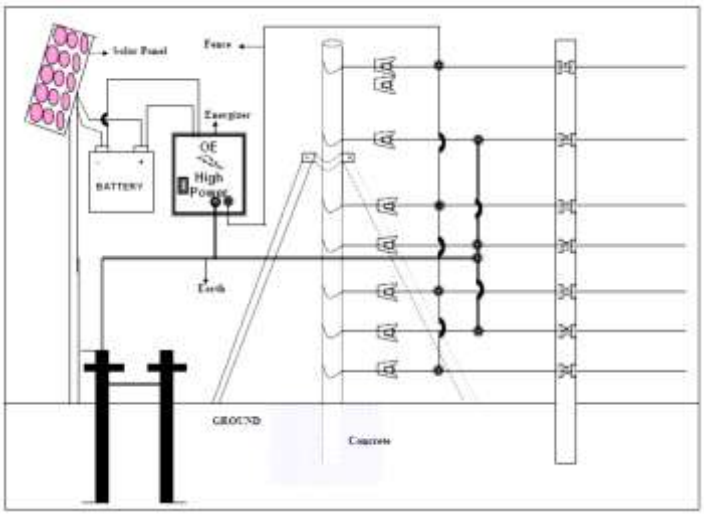

Fig.: Solar Fencing System

IV. RESULT

When the motion is detected by PIR motion sensor, the microcontroller gives the signal to the GSM module and buzzer. The GSM module send the message to authorized person and buzzer gives the indication. The microcontroller provide the delay of 6 second to turn on the relay and fencing circuit will on. The current flowing through the fencing wire is 0.6 mA, and the voltage across phase and neutral is 230-240 V. The microcontroller provide a delay of 5 second to turn off the relay and the fencing circuit will off. The red LED gives the on-off status of fencing circuit.

V. CONCLUSION

Thus we are concluded the solar fencing system is designed and fabricated successfully. The project shows that the proposed system is simple and efficient one. We are save cost in order to implement this project for security purpose as well as less time consume.

In the existing system, the fencing is operated by passing continuous electric power supply. Due to continuous power flow in the fencing system, the living beings are affected. Disadvantage of existing system is the Electric power loss. There is need for government approval for giving current shock on the fence. Affect the human beings. Instead of electric power supply, using sensor and GSM Modem to reduce power level. Fence works on Solar Energy with backup facility to run uninterruptedly during the nights, as well as the cloudy days. Motor can be controlled by GSM. Advantage of our proposed system are Solar energy is used, Easy to control and maintain the fence, Less time consuming.

ACKNOWLEDGEMENT

The author extended their gratitude towards the guide from electrical engineering (E&P) department at DES'sCOET, Dhamangaon Rly, for their guidance and also expressing gratitude towards the department and parents for their continuous support.

REFERENCES

[1] A. Gandhimathi, P. Madhumitha, T. Kalaivani, "Solar Power Fencing System for Agriculture Protection using GSM," *An ISO 3297: 2007 Certified Organization),* vol.4, no.12, December 2016.

[2] Chunjuan Wei, Junjie Yang, Wu Zhu and JianLv, "A design of Alarm system for substation perimeter based on Laser Fence and Wireless Communication," *IEEE conference on Computer Application and SystemModeling (ICCASM),* vol.3, pp.543-546, 2010.

[3] D. M. Kadam, Atul R. Dange and V. P. Khambalkar, **"**Performance of solar power fencing system for agriculture,"*Journal of Agricultural Technology,* vol.7, no.5, pp.1199-1209, ISSN 1686-91411, 2011.

[4] G. Alex, Dr. M. Janakiranimathi, "Solar Based Plant Irrigation System," *International Conference on Advances in Electrical, Electronics, Information, Communication and Bio-Informatics (AEEICB16), IEEE,* 2016.

[5] Lanka Wijesinghe, Prasanga B. Siriwardena, ShamaliDahanayake, DharshanaKasthuriratne, "Electric Fence Intrusion Alert System," *IEEE*, 2014.

[6] M. Ananthakumar, "Design of Solar Powered Energizer and On-line Monitoring of Electric Fencing system," *IEEE*, 2014.

[7] NeerajKhera, AmitVerma, "Development of an Intelligent System for Bank security,"*IEEE*, 2014.

[8] Obukhov S.G., Plotnikov I.A., "Methods of Effective Use of Solar Power System," *2nd International Conference on Industrial Engineering, Applications and Manufacturing (ICIEAM)* ,2016.

[9] Shobhit Kumar Nagpal, "Hardware Implementation of Intruder Recognition in a Farm through Wireless Sensor Network," *IEEE*, 2016.

[10] Thrimawithana, D. Madawala, U.K, "Pulse propagation along multi wire electric fences," *IEEEjournals and Magazines on Science, Measurement &Technology*, vol.2, no.5, pp.349-358, September 2008.