Design and Fabrication of Hydraulic Braking System for Formula Style Vehicle

[1]Mujiburrehman Gouri, [2]Er.ChawanAnup Narayan

Automobile Department,
M.H. SabooSiddik College Of Engineering, Mumbai,India

***Abstract*—The objective of this design is to optimize the configuration of the braking system for FORMULA STYLE vehicle.These modifications will enhance the car's performance by considering ergonomic considerations.To design an adjustable with universally mounted pedal setup capable of locking all the four wheels and stopping the vehicle in a straight line at the end of an acceleration run specified by the brake inspectors irrespective of the Driver's length or weight. Also it is important for the driver to get out of the car within 5 seconds in any emergency.The final objective is to design and fabricate the Hydraulic Braking system.**

***IndexTerms*—Hydraulic Braking System, style, styling, insert.**

I. INTRODUCTION

Most brakes commonly use friction between two surfaces pressed together to convert the kinetic energy of the moving object into heat, though other methods of energy conversion may be employed. Brakes are generally applied to rotating axles or wheels, but may also take other forms such as the surface of a moving fluid (flaps deployed into water or air). Some vehicles use a combination of braking mechanisms, such as drag racing cars with both wheel brakes and a parachute, or airplanes with both wheel brakes and drag flaps raised into the air during landing.In practice, fast vehicles usually have significant air drag, and energy lost to air drag rises. Friction brakes on automobiles store braking heat in the drum brake or disc brake while braking then conduct it to the air gradually. When traveling downhill some vehicles can use their engines to brake.When the brake pedal of a modern vehicle with hydraulic brakes is pushed against the master cylinder, ultimately a piston pushes the brake pad against the brake disc which slows the wheel down. On the brake drum it is similar as the cylinder pushes the brake shoes against the drum which also slows the wheel down.

II. TYPES OF BRAKES

a.**Frictional brakes**-Frictional brakes are most common and can be divided broadly into "shoe" or "pad" brakes, using an explicit wear surface, and hydrodynamic brakes, such as parachutes, which use friction in a working fluid and do not explicitly wear. Typically the term "friction brake" is used to mean pad/shoe brakes and excludes hydrodynamic brakes, even though hydrodynamic brakes use friction.

b.Pumping brakes-Pumping brakes are often used where a pump is already part of the machinery. For example, an internal-combustion piston motor can have the fuel supply stopped, and then internal pumping losses of the engine create some braking. Some engines use a valve override called a Jake brake to greatly increase pumping losses. Pumping brakes can dump energy as heat, or can be regenerative brakes that recharge a pressure reservoir called a hydraulic accumulator.

c.Electromagnetic brakes-Electromagnetic brakes are likewise often used where an electric motor is already part of the machinery. For example, many hybrid gasoline/electric vehicles use the electric motor as a generator to charge electric batteries and also as a regenerative brake. Some diesel/electric railroad locomotives use the electric motors to generate electricity which is then sent to a resistor bank and dumped as heat. Some vehicles, such as some transit buses, do not already have an electric motor but use a secondary "retarder" brake that is effectively a generator with an internal short-circuit.

i.Dynamic brakes

Dynamic braking is the use of the electric traction motors of a railroad vehicle as generators when slowing the locomotive. It is termed rheostatic if the generated electrical power is dissipated as heat in brake grid resistors, and regenerative if the power is returned to the supply line.

ii.Anti-Lock Braking system

An anti-lock braking system or anti-skid braking system (ABS) is an automobile safety system that allows the wheels on a motor vehicle to maintain tractive contact with the road surface according to driver inputs while braking, preventing the wheels from locking up (ceasing rotation) and avoiding uncontrolled skidding.

a.
Fig a-Frictional Brake

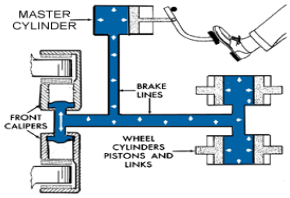

b.
Fig b-Pumping Brake

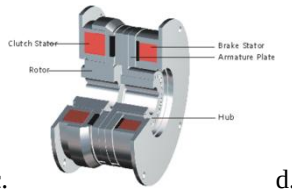

c.
Fig c-Dynamic Brake

d.
Fig d-Anti Lock Brake.

III. HYDRAULIC BRAKES

The hydraulic brake is an arrangement of braking mechanism which uses brake fluid, typically containing ethylene glycol, to transfer pressure from the controlling mechanism to the braking mechanism.

Principle: Pascal's law is the basis of hydraulic drive systems. As the pressure in the system is the same, the force that the fluid gives to the surroundings is therefore equal to pressure area. In such a way, a small piston feels a small force and a large piston feels a large force.

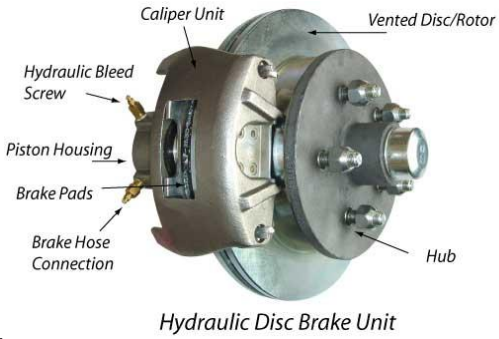

e.
Fig e- Hydraulic Disc Brakes

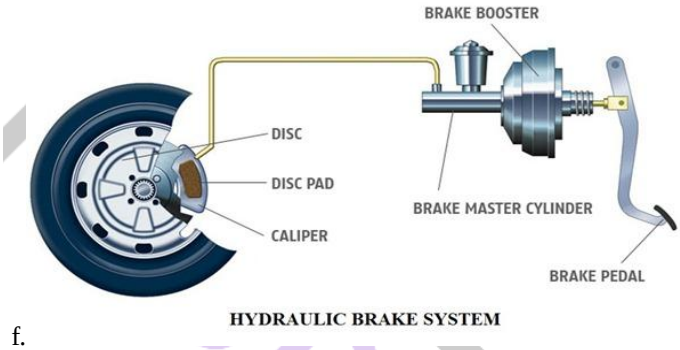

f.
Fig f. Hydraulic brakes components

The entire braking system can be broken down into the following main parts: Master cylinder (Lever),Lines, Fluid, Slave cylinder (Caliper) , Pads, Rotor.

IV. FORMULA AND CALCULATIONS-

PARAMETER	FORMULA	VALUE
Static axle load distribution (¥)	Mr/M [static rear axle load (kg)/ total vehicle mass (kg)]	0.57
Relative Centre of Gravity Height (X)	h/Wb [vertical distance from CG to ground level (m)/ wheel base (m)]	0.16
Dynamic Axle Loads (M) (Two Axle Vehicles Only)	[(1-¥)+(X.a).M] [a =1g deceleration]	176.1 kg.
Braking Force (Bf)	M.a.g	1209.28 N
Total possible braking force on axle (Fa)	Mad. g . μ [Mad = dynamic axle mass (kg) , μ = coefficient of friction between road and tire]	850.82N
Brake Torque(T)	(B.Fw.R) / r [BFw = braking force for the wheel (N), R = static laden radius of tyre (m)]	490.96 Nm
Real life deceleration-a/ave& stopping distance-S	aave = v/[(v/a)+0.3g)] , S = v2 / (2g . aave)	0.81 m/sec2 9.8m
Brake on time (sec)	t =v / (a.g)	1.274sec
Braking power -P	P = E / t [E=(KE+PE+RE)]	19546.67 Watts

V. MODELLING AND ANALYSIS

a. Modelling [Software used: SOLID WORKS 2016]

- Steps-First OPEN a new file b giving command.
- Select the desired plane of sketch (front, top etc.)
- For brake pedal front plane were selected.
- Select Extrude command and extrude it to the desired thickness.
- We have selected thickness of 6mm.

- Select side view, open sketch draw slots and holes according to requirement. This is done for bolts and for weight reduction.
- Select CUT-Extrude through and through holes can be seen and save the file.
- Repeat the steps for further components.

b. Analysis [Software used: WORK BENCH 2016]

- Open the new ansys file (list of various analysis will be displayed.
- Select static structural.
- Import the geometry to be analyzed.
- Insert the geometry into the static structural analysis.
- Open geometric modeling and define the contact points of component.
- Select the surfaces and generate the mesh model and nodal solution.
- Generates the load/forces on selected surface.
- Define magnitude and direction of the force.
- Repeat step for applying pressure, moment and temperature.
- Define total deformation, stress induced, strain etc. from the static solution.
- Click on solve.
- Results will be displayed showing maximum and minimum values of selected parameters.

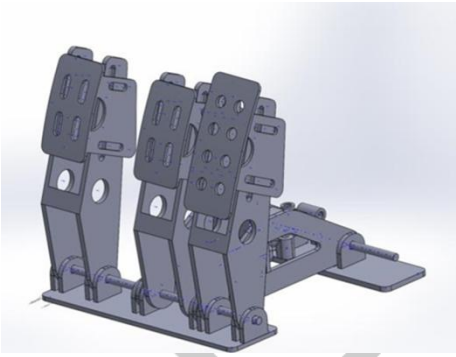

g. Fig g-CAD Model

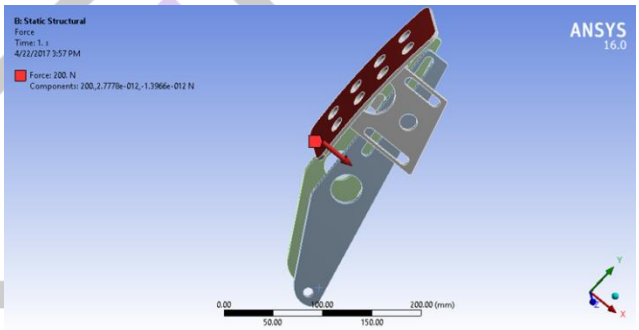

h. Fig h-Force applied on Foot rest

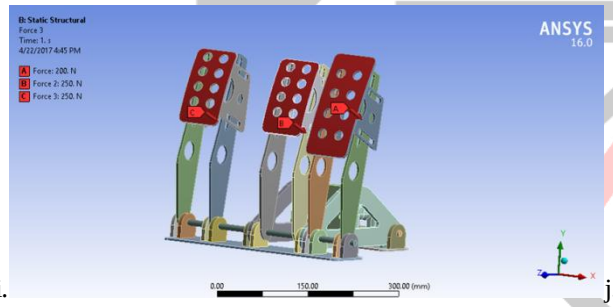

i. Fig i-Force applied on assembly

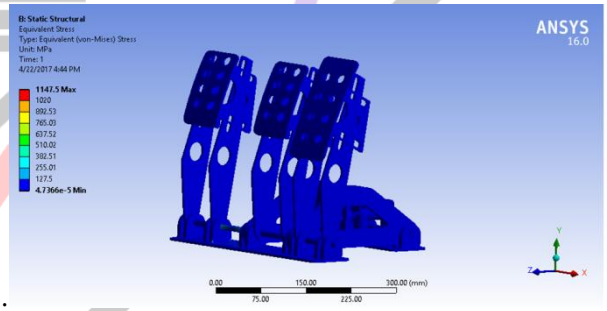

j. Fig j-Equivalent Stress on assembly.

VI. FABRICATION

k. Fig k- Fabricated parts

l. Fig l - Fabrication of Actual Model.

m. 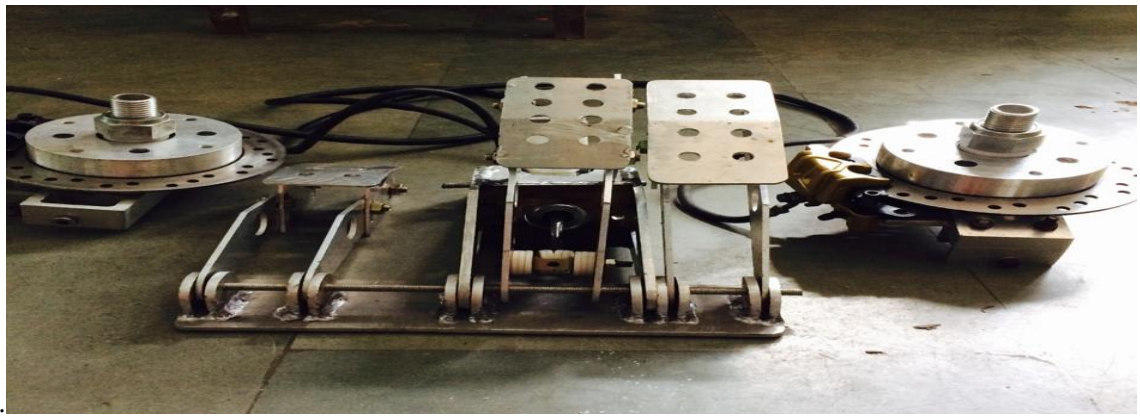

Fig m- Final Model.

VII. CONCLUSIONS AND FUTURE WORK

The project involved a real life design problem and provided and immense experience in the field of contemporary performance vehicle design. this effort also gave an insight into computer aided engineering (CAE) and how it can be used to solve trivial as well as complicated problems in mechanical engineering.In this project the theory learnt so far in the curriculum was made of in a large number of situations. Various concepts from the courses in the curriculum including machine design, Mechanical engineering drawing, solid mechanics, Finite element method for stress analysis, Dynamics of machinery etc. were used in the different modules of the project. The knowledge was gained in the use of finite element method, CAD and Design for manufacturing.

VIII. REFERENCES

[1] Clauser H.R., 1997, “Industrial and Engineering Materials”, McGraw-Hill.
[2] Kripal Singh., 2013, “Automobile Engineering-Vol 1”
[3] William F. Miliken., 1996, “Race Car Vehicle Dynamics.”
[4] www.sae.org/braking-system/standards/automotive.com.