A Review on Power–Quality Improvement of Distribution Networks by Active Filtering Method

[1]Rashmi H. Patil, [2]Miss P. A. Desai

[1]P.G Scholar, [2]Assitant Professor
Department of Electrical Engineering
Matoshri College of Engineering and Technology, Nashik, India

Abstract— The high standard of living enjoyed by every citizen and progress of any country largely depends on the availability of good quality and abundant availability of the electric power. Recently with the advancement of science and technology, the demand for electric power is increasing day by day at an exponential rate. Many consumer appliances demand quality power continuously for their operation. The performance of the end user equipment is heavily dependent on the quality of power supplied to it. But the quality of power delivered to the end user is affected by various external and internal factors. They are like voltage and frequency variations, faults, outages etc. These power quality problems reduce the life time and efficiency of the equipment. Thus, to enhance the performance of the consumer equipment and also the overall performance of the system these problems should be mitigated. The term power quality became most prominent in the power sector and both the electric power supply company and the end users are concerned about it. With the increasing use of nonlinear devices either for residential or industrial applications, the power distribution system is polluted with harmonics. Thus filters are very much essential for the harmonic compensation and improving the power quality and hence increases the reliability of the distribution system. The harmonic compensation can be obtained by Passive Filters (PF), Active Power Filters (APF) and hybrid filters (HPF). Active Power Filters (APF) are often used in applications where low current harmonics are desirable and improvement of quality of energy taken from the power grid are needed. This paper presents a comprehensive review of active filter (AF) configurations, control strategies, selection of components, other related economic and technical considerations, and their selection for specific applications. It is aimed at providing a broad perspective on the status of AF technology with power quality issues.

Index Terms— Active power filters, active power line conditioners, harmonics and reactive power compensation, power quality, fully tuned branch.

I. INTRODUCTION

The electrical distribution network is a power delivery system consisting of cables that deliver electric power from its point of generation to the end users. Electrical distribution systems are primarily designed to meet the consumer's demands for energy. In recent years, more power electronics are being applied to distribution networks such as three phase voltage source inverter. The network also provides power supply to the non-linear loads such as three phase diodes or thyristor rectifiers for medium voltage drives or large power industrial applications. Since the action of power electronic devices is inherently non-linear, there arises a Power-Quality problem in the distribution network and the power supply connected with that network.

Solid state control of ac power using thyristors and other semiconductor switches is widely employed to feed controlled electric power to electrical loads, such as adjustable-speed drives (ASD's), furnaces, computer power supplies, etc. Such controllers are also used in HV dc systems and renewable electrical power generation. As nonlinear loads, these solid-state converters draw harmonic and reactive power components of current from ac mains. In three-phase systems, they could also cause unbalance and draw excessive neutral currents. The injected harmonics, reactive power burden, unbalance, and excessive neutral currents cause low system efficiency and poor power factor. They also cause disturbance to other consumers and interference in nearby communication networks. Extensive surveys [1]—[15] have been carried out to quantify the problems associated with electric power networks having nonlinear loads. Conventionally passive L-C filters were used to reduce harmonics and capacitors were employed to improve the power factor of the ac loads. However, passive filters have the demerits of fixed compensation, large size, and resonance. The increased severity of harmonic pollution in power networks has attracted the attention of power electronics and power system engineers to develop dynamic and adjustable solutions to the power quality problems.

The presence of harmonics in the power lines results in greater power losses in distribution, interference problems in communication systems and, sometimes, in operation failures of electronic equipments, which are more and more sensitive since they include microelectronic control systems, which work with very low energy levels. Because of these problems, the issue of the power quality delivered to the end consumers is, more than ever, an object of great concern. International standards concerning electrical power quality (IEEE-519, IEC 61000, EN 50160, among others) impose that electrical equipments and facilities should not produce harmonic contents greater than specified values, and also specify distortion limits to the supply voltage. Meanwhile, it is mandatory to solve the harmonic problems caused by those equipments already installed. Passive filters have been used as a solution to solve harmonic current problems, but they present several disadvantages, namely: they only filter the frequencies they were previously tuned for; their operation cannot be limited to a certain load; resonances can occur because of the interaction between the passive filters and other loads, with unpredictable results. To cope with these disadvantages, recent efforts have been concentrated in the development of Active filters.

II. RELATED WORK

There are a large number of publications covering the power quality survey, measurements, analysis, cause, and effects of harmonics and reactive power in the electric networks [1]—[25]. AF's are basically categorized into three types, namely, two-wire (single phase), three-wire, and four-wire three-phase configurations to meet the requirements of the three types of nonlinear loads on supply systems. Single-phase loads, such as domestic lights and ovens, TV's, computer power supplies, air conditioners, laser printers, and Xerox machines behave as nonlinear loads and cause power quality problems. Single-phase (two wire) AF's are investigated [26]-[55] in varying configurations and control strategies to meet the needs of single-phase nonlinear loads. Starting in 1971, many configurations, such as the active series filter [48], active shunt filter [26]-[47], and combination of shunt and series filter [39] have been developed and commercialized also for uninterruptible power supply (UPS) applications [50], [52], [53]. Both concepts based on a current source inverter (CSI) with inductive energy storage and a voltage-source inverter (VSI) with capacitive energy storage are used to develop single phase AF's Many control strategies such as instantaneous reactive power theory initially developed by Akagi et al. [56], synchronous frame d-q theory [57], synchronous detection method [58], and notch filter method are used in the development of three-phase AF's.

III. CONFIGURATIONS

AF's can be classified based on converter type, topology, and the number of phases. The converter type can be either CSI or VSI bridge structure. The topology can be shunt, series, or a combination of both. The third classification is based on the number of phases, such as two-wire (single phase) and three- or four-wire three-phase systems.

1. Converter-Based Classification

There are two types of converters used in the development of AF's. Fig. 1 shows the current-fed pulse width modulation (PWM) inverter bridge structure. It behaves as a nonsinusoidal current source to meet the harmonic current requirement of the nonlinear load. A diode is used in series with the serf commutating device (IGBT) for reverse voltage blocking. However, GTO-based configurations do not need the series in the development of three-phase AF's. diode, but they have restricted frequency of switching. They are considered sufficiently reliable [59], [60], but have higher losses and require higher values of parallel ac power capacitors. Moreover, they cannot be used in multilevel or multistep modes to improve performance in higher ratings.

The other converter used as an AF is a voltage-fed PWM inverter structure, as shown in Fig. 2. It has a serf-supporting dc voltage bus with a large dc capacitor. It has become more dominant, since it is lighter, cheaper, and expandable to multilevel and multistep versions, to enhance the performance with lower switching frequencies. It is more popular in UPS based applications, because in the presence of mains, the same inverter bridge can be used as an AF to eliminate harmonics of critical nonlinear loads.

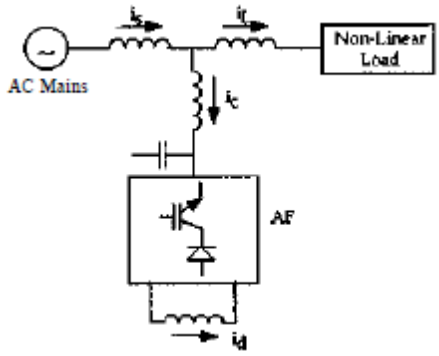

Fig 1 Current-fed-type AF.

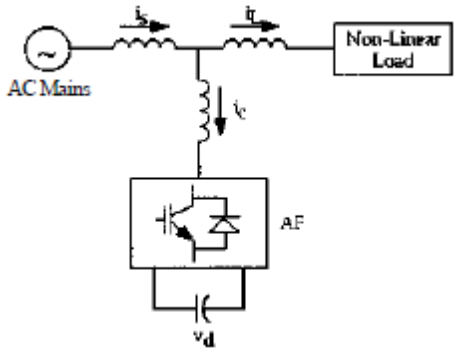

Fig 2 Voltage-fed-type AF.

2. Configuration-Based Classification

APF's can be classified based on converter type, topology, and the number of phases [61, 62]. The converter type is mainly two types:

- voltage source inverter (VSI)
- Current source inverter (CSI).

The topology of APF is classified in to three types.

- Series active power filters (Se APF).
- Shunt active power filters (Sh APF).
- Hybrid active power filters (HAPF).

Finally based on the phases the APF mainly two types:

- Two-wire (single phase) system.
- Three or four wire three phase system.

2.1 Series Active Power Filter (series APF)

The aim of the series APF is to locally modify the impedance of the grid. It is considered as harmonic voltage source which cancel the voltage perturbations which come from the grid or these created by the circulation of the harmonic currents into the grid impedance. However, series APFs cannot compensate the harmonic currents produced by the loads [63, 64] Fig. 3 shows Series APF connected to the network.

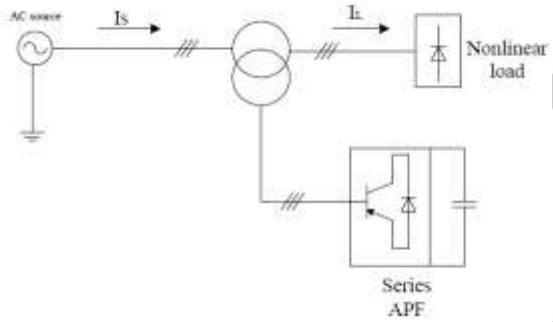

Fig 3 Series APF connected to the network

2.2 Shunt Active Power Filter (shunt APF)

The shunt APFs are connected in parallel with the harmonic producing loads. They are expected to inject in real time the harmonic currents absorbed by the pollutant loads. Thus, the grid current will become sinusoidal [65, 66].

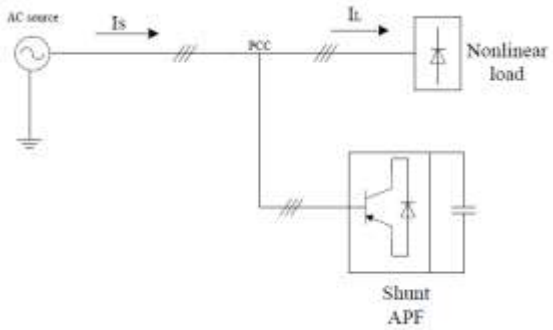

Fig 4 Shunt APF connected to the network

2.3 Hybrid Active Power Filter (HAPF)

To reduce the cost of the static compensation, combination of static and PF is called as hybrid APF. The PPF are used to cancel the most relevant harmonics of the load, and the active filter is dedicated to improving the performance of PPF or to cancel other harmonics components. As a result, the total cost decreases without reduction of efficiency. Fig. 5 and Fig. 6 shows the usual hybrid topology [67, 68].

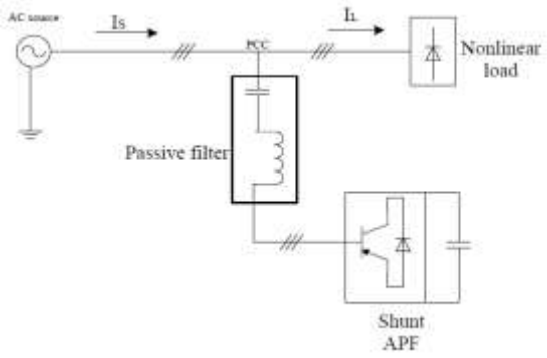

Fig 5 Parallel of SAPF and PPF

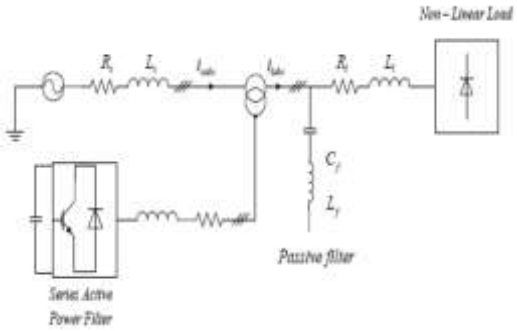

Fig 6 Series APF with PPF

IV. CONTROL STRATEGIES

Control strategy is the heart of the AF and is implemented in three stages. In the first stage, the essential voltage and current signals are sensed using power transformers (PT's), CT's, Hall-effect sensors, and isolation amplifiers to gather accurate system information. In the second stage, compensating commands in terms of current or voltage levels are derived based on control methods [69]-[85] and AF configurations. In the third stage of control, the gating signals for the solid state devices of the AF are generated using PWM, hysteresis, sliding-mode, or fuzzy-logic-based control techniques. The control of the AF's is realized using discrete analog and digital devices or advanced microelectronic devices, such as single-chip microcomputers, etc.

1. Signal Conditioning

Several instantaneous voltage and current signals are required for the purpose of implementation of the control algorithm. These signals are also useful to monitor, measure, and record various performance indexes, such as total harmonic distortion (THD), power factor, active and reactive power, etc. The typical voltage signals are ac terminal voltages and voltages across series elements. The current signals to be sensed are load currents, supply currents, compensating currents, and dc-link current of the AF. Voltage signals are sensed using either PT's or Hall effect voltage sensors or isolation amplifiers. Current signals are sensed using CT's and/or Hall-effect current sensors. The voltage and current signals are sometimes filtered to avoid noise problems. The filters are either hardware based (analog) or software based (digital) with either low-pass, high-pass, or bandpass characteristics.

2. Derivation of Compensating Signals

The control strategies to generate compensation commands are based on frequency-domain or time-domain correction techniques.

1) Compensation in Frequency Domain: Using the Fourier transformation, the compensating harmonic components are separated from the harmonic-polluted signals and combined to generate compensating commands. The device switching frequency of the AF is kept generally more than twice the highest compensating harmonic frequency for effective compensation. The on-line application of Fourier transform (solution of a set of nonlinear equations) is a cumbersome computation and results in a large response time.

2) Compensation in Time Domain: There is a large number of control methods in the time domain, which are known as instantaneous "p-q" theory [59], [86], [87], synchronous d-q reference frame method [19], [20], synchronous detection method [88], [89], notch filter method [90], [91], P-I controller [51], sliding mode controller [51]. The instantaneous active and reactive power (p-q) theory [92] has been widely used. The instantaneous active and reactive power can be computed in terms of transformed voltage and current signals. From instantaneous active and reactive powers, harmonic active and reactive powers are extracted using low-pass and high-pass filters.

V. INSTANTANEOUS REAL AND REACTIVE POWER THEORY (P-Q METHOD)

This theory takes into account the instantaneous reactive power arises from the oscillation of power between source and load and it is applicable for sinusoidal balanced/unbalanced voltage but fails for non-sinusoidal voltage waveform. It basically 3 phase system as a single unit and performs Clarke's transformation (a-b-c coordinates to the α-β-0 coordinates) over load current and

voltage to obtain a compensating current in the system by evaluating instantaneous active and reactive power of the network system.

The p-q method control strategy in Algorithm form is shown in Fig. 7

This theory works on dynamic principle as its instantaneously calculated power from the instantaneous voltage and current in 3 phase circuits. Since the power detection taking place instantaneously so the harmonic elimination from the network take place without any time delay as compared to other detection method.

Although the method analysis the power instantaneously yet the harmonic suppression greatly depends on the gating sequence of three phase IGBT inverter which is controlled by different current controller such as hysteresis controller, PWM controller, triangular carrier current controller. But among these hysteresis current controlled method is widely used due to its robustness, better accuracy and performance which give stability to power system.

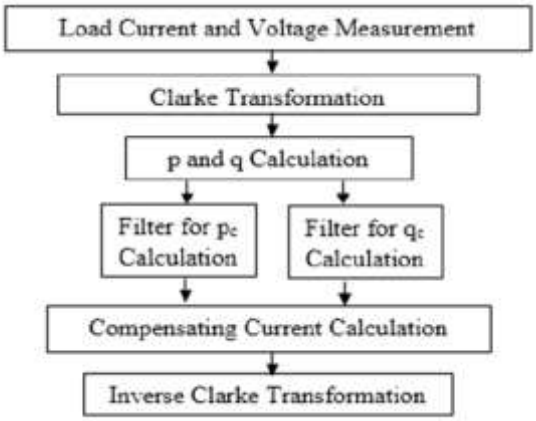

Fig 7 P-Q method control strategy

VI. PERFORMANCE EVALUATION

1. Total harmonic distortion (THD)

THD of a signal is a measurement of the harmonic distortion present in current or voltage. It is defined as the ratio of the sum of the powers of all harmonic components to the power of the fundamental frequency

$$THD_i = \sqrt{\frac{\sum I_n^2}{I_1}} \times 100\% \quad (n = 2,3,4,5.....\infty)$$

Where

I_1 is the fundamental component of the current

I_n is the total current

Case study on the IAF method is performed from the following three aspects: 1) filtering performance with comparison to the APF method; 2) dynamic response when applying the IAF method in the distribution network; and 3) dynamic response to variation of the nonlinear load.

a) Filtering Performance

The total harmonic distortion (THD) is 20.26%. When using the IAF method, the harmonic currents in the grid winding may get suppressed and the THD can be reduced to nearly 4.18%.

b) Dynamic Response When Switching on the FT Branch

The branch can attract the harmonic components from the load side; thus, the harmonic currents in the grid winding must get reduced.

c) Dynamic Response to Nonlinear Load Variation

The IAF can track the load variation and the FT branch attracts more harmonic currents, thus, the current waveform in the grid winding of the converter transformer should give a good sinusoid.

VII. CONCLUSIONS

Active filters are an up-to-date solution to power quality problems. Shunt active filters allow the compensation of current harmonics and unbalance, together with power factor correction, and can be a much better solution than the conventional approach (capacitors for power factor correction and passive filters to compensate for current harmonics). This paper presents the p-q theory as a suitable tool to the analysis of non-linear three-phase systems and for the control of active filters.

Based on this theory, two control strategies for shunt active filters were described, one leading to constant instantaneous supply power and the other to sinusoidal supply current. The implementation of active filters based on the p-q theory are cost-effective solutions, allowing the use of a large number of low-power active filters in the same facility, close to each problematic load (or group of loads), avoiding the circulation of current harmonics, reactive currents and neutral currents through the facility power lines.

REFERENCES

[1] IEEE Working Group on Power System Harmonics, "Power system harmonics: An overview," IEEE Trans. Power App. Syst, vol. PAS-102, pp. 2455-2460, Aug. 1983.
[2] T. C. Shuter, H. T. Vollkommer, Jr., and J. L. Kirkpatrick, "Survey of harmonic levels on the American electric power distribution system," IEEE Trans. Power Delivery, vol. 4, pp. 2204-2213, Oct. 1989.
[3] A. C. Liew, "Excessive neutral currents in three-phase fluorescent lighting circuits," IEEE Trans. Ind. Applicat., vol. 25, pp. 776-782, July/Aug. 1989.
[4] T. M. Gruzs, "A survey of neutral currents in three-phase computer power systems," IEEE Trans. Ind. Applicat., vol. 26, pp. 719-725, July/Aug. 1990.
[5] J. S. Subjak Jr. and J. S. Mcquilkin, "Harmonics-causes, effects, measurements, analysis: An update," IEEE Trans. Ind. Applicat., vol. 26, pp. 1034-1042, Nov./Dec. 1990.
[6] M. E. Amoli and T. Florence, "Voltage, current harmonic control of a utility system—A summary of 1120 test measurements," IEEE Trans. Power Delivery, vol. 5, pp. 1552-1557, July 1990.
[7] H. M. Beides and G. T. Heydt, "Power system harmonics estimation, monitoring," Elect. Mack Power Syst, vol. 20, pp. 93-102, 1992.
[8] A. E. Emanuel, J. A. Orr, D. Cyganski, and E. M. Gulchenski, "A survey of harmonics voltages, currents at the customer's bus," IEEE Trans. Power Delivery, vol. 8, pp. 411^21, Jan. 1993.
[9] P. J. A. Ling and C. J. Eldridge, "Designing modern electrical systems with transformers that inherently reduce harmonic distortion in a PC-rich environment," in Proc. Power Quality Conf., Sept. 1994, pp. 166-178.
[10] P. Packebush and P. Enjeti, "A survey of neutral current harmonics in campus buildings, suggested remedies," in Proc. Power Quality Conf., Sept. 1994, pp. 194-205.
[11] A. Mansoor, W. M. Grady, P. T. Staats, R. S. Thallam, M. T. Doyle, and M. J. Samotyj, "Predicting the net harmonic currents produced by large numbers of distributed single-phase computer loads," IEEE Trans. Power Delivery, vol. 10, pp. 2001-2006, Oct. 1994.
[12] IEEE Working Group on Nonsinusoidal Situations, "A survey of North American electric utility concerns regarding nonsinusoidal waveforms, "IEEE Trans. Power Delivery, vol. 11, pp. 73-78, Jan. 1996.
[13] A. Domijan Jr., E. E. Santander, A. Gilani, G. Lamer, C. Stiles, and C. W. Williams Jr., "Watthour meter accuracy under controlled unbalanced harmonic voltage, current conditions," IEEE Trans. Power Delivery, vol. 11, pp. 64-72, Jan. 1996.
[14] IEEE Working Group on Nonsinusoidal Situations, "Practical definitions for powers in systems with nonsinusoidal waveforms, unbalanced loads: A discussion," IEEE Trans. Power Delivery, vol. 11, pp. 79-101, Jan. 1996.
[15] C. K. Duffey and R. P. Stratford, "Update of harmonic standard IEEE- 519: IEEE recommended practices, requirements for harmonic control in electric power systems," IEEE Trans. Ind. Applicat., vol. 25, pp. 1025-1034, Nov./Dec. 1989.
[16] Active Filters: Technical Document, 2100/1100 Series, Mitsubishi Electric Corp., Tokyo, Japan, 1989, pp. 1-36.
[17] "Harmonic currents, static VAR systems," ABB Power Systems, Stockholm, Sweden, Inform. NR500-015E, Sept. 1988, pp. 1-13
[18] A. H. Kikuchi, "Active power filters," in Toshiba GTR Module (IGBT) Application Notes, Toshiba Corp., Tokyo, Japan, 1992, pp. 44-45.
[19] S. A. Moran and M. B. Brennen, "Active power line conditioner with fundamental negative sequence compensation," U.S. Patent 5 384696, Jan. 1995.
[20] S. Bhattacharya and D. M. Divan, "Hybrid series active/parallel passive power line conditioner with controlled harmonic injection," U.S. Patent 5 465 203, Nov. 1995.
[21] T. J. E. Miller, Reactive Power Control in Electric Systems. Toronto, Canada: Wiley, 1982, pp. 32^8.
[22] J. W. Clark, AC Power Conditioners-Design, Applications. San Diego, CA: Academic, 1990.
[23] J. Arrillage, D. A. Bradley, and P. S. Bodger, Power System Harmonics Chichester, U.K.: Wiley, 1985.
[24] G. T. Heydt, Electric Power Quality. West Lafayette, IN: Stars in a Circle, 1991.
[25] D. A. Paice, Power Electronic Converter Harmonics-Multipulse Methods for Clean Power. New York: IEEE Press, 1996.
[26] H. Sasaki and T. Machida, "A new method to eliminate AC harmonic currents by magnetic flux compensation-considerations on basic design," IEEE Trans. Power App. Syst, vol. PAS-90, pp. 2009-2019, Jan. 1971.
[27] L. Gyugyi and E. Strycula, "Active AC power filters," in Conf. Rec. IEEE-IAS Annu. Meeting, 1976, pp. 529-535.
[28] F. Harashima, H. Inaba, and K. Tsuboi, "A closed-loop control system for the reduction of reactive power required by electronic converters," IEEE Trans. Ind. Electron. Contr. Instrum., vol. IECI-23, pp. 162-166, May 1976.
[29] E. Epstein, A. Yair, and A. Alexandravitz, "Analysis of a reactive current source used to improve current drawn by static inverters," IEEE Trans. Ind. Electron. Contr. Instrum., vol. IECI-2, pp. 172-177, Aug. 1979.
[30] J. Uceda, F. Aldana, and P. Martinez, "Active filters for static power converters," Proc. Inst. Elect. Eng., vol. 130, pt. B, no. 5, pp. 347-354, Sept. 1983.
[31] V. Rajagopalan, A. Jacob, A. Sevigny, T. N. Nguy, and L. Andy, "Harmonic currents compensation-scheme for electrical distribution systems," in Proc. IFAC Control in Power Electronics and Electric Drives Conf, Lausanne, Switzerland, 1983, pp. 683-690.
[32] P. L. A. Drouin, A. Sevigny, A. Jacob, and V. Rajagopalan, "Studies on line current harmonics compensation scheme suitable for an electric distribution system," Can. Elect. Eng. J., vol. 8, no. 4, pp. 123-129, 1983.
[33] A. Alexandrovitz, A. Yair, and E. Epstein, "Analysis of a static VAR compensator with optimal energy storage element," IEEE Trans. Ind. Electron., vol. IE-31, pp. 28-33, Feb. 1984.

[34] G. H. Choe and M. H. Park, "Analysis, control of active power filter with optimized injection," in Proc. IEEE PESC'86, 1986, pp. 401^09.
[35] C. P. Henze and N. Mohan, "A digitally controlled AC to DC power conditioner that draws sinusoidal input current," in Proc. IEEE PESC'86, 1986, pp. 531-540.
[36] K. K. Sen and A. E. Emanuel, "Unity power-factor single-phase power conditioning," in Proc. IEEE PESC'87, 1987, pp. 516-524.
[37] E. Tironi, D. Zaninelli, and G. Ubezio, "Compensation of the reactive power by means of a current-controlled transistor inverter," in Proc. 2nd European Power Electronics Conf, 1987, pp. 1293-1299.
[38] S. M. Williams and R. G. Hoft, "Discrete controlled harmonic, reactive power compensator," in Conf. Rec. IEEE-IAS Annu. Meeting, 1988, pp. 881-887.
[39] S. Moran, "A line voltage regulator/conditioner for harmonic-sensitive load isolation," in Conf. Rec. IEEE-IAS Annu. Meeting, 1989, pp. 945-951.
[40] C. Chen and D. M. Divan, "Simple topologies for single-phase AC line conditioning," in Conf. Rec. IEEE-IAS Annu. Meeting, 1991, pp. 911-917.
[41] M. Kazerani, P. D. Ziogas, and G. Joos, "A novel active current waveshaping technique for solid-state input power factor conditioners," IEEE Trans. Ind. Electron., vol. 38, pp. 72-78, Feb. 1991.
[42] P. Enjeti, W. Shireen, and I. Pitel, "Analysis, design of an active power filter to cancel harmonic currents in low voltage electric power distribution systems," in Proc. IEEE IECON'92, 1992, pp. 368-373.
[43] C. Tuttas, "Compensation of capacitive loads by a voltage-source active filter," Eur. Trans. Elect. Power Eng., vol. 2, no. 1, pp. 15-19, Jan./Feb. 1992.
[44] R. M. Duke and S. D. Round, "The steady state performance of a controlled current active filter," IEEE Trans. Power Electron., vol. 8, pp. 140-146, Apr. 1993.
[45] S. D. Round and R. M. Duke, "Real time optimization of active filter energy savings," in Proc. IEEE IECON'93, 1993, pp. 1088-1092.
[46] S. D. Round and N. Mohan, "Comparison of frequency, time domain neural network controllers for an active power filter," in Proc. IEEE IECON'93, 1993, pp. 1099-1104.
[47] V. John, N. Mohan, E. Persson, and R. Nilssen, "High frequency isolation in standby power supplies which compensate load harmonic currents," in Proc. IEEE IECON'93, 1993, pp. 1264-1268.
[48] J. Nastran, R. Cajhen, M. Seliger, and P. Jereb, "Active power filter for nonlinear AC loads," IEEE Trans. Power Electron., vol. 9, pp. 92-96, Jan. 1994.
[49] G. H. Rim, Y. Kang, W. H. Kim, and J. S. Kim, "Performance improvement of a voltage source active filter," in Proc. IEEEAPEC'95, 1995, pp. 613-619.
[50] J. H. Choi, G. W. Park, and S. B. Dewan, "Standby power supply with active power filter ability using digital controller," in Proc. IEEE APEC'95, 1995, pp. 783-789.
[51] D. A. Torrey and A. M. A. M. Al-Zamel, "Single-phase active power filters for multiple nonlinear loads," IEEE Trans. Power Electron., vol. 10, pp. 263-272, May 1995.
[52] Y. Qin and S. Du, "A DSP based active power filter for line interactive UPS," in Proc. IEEE IECON'95, 1995, pp. 884-888.
[53] J. C. Wu and H. L. Jou, "A new UPS scheme provides harmonic [80] suppression, input power factor correction," IEEE Trans. Ind. Electron., vol. 42, pp. 629-635, Dec. 1995.
[54] C. Y. Hsu and H. Y. Wu, "A new single-phase active power filter with reduced energy storage capacitor," in Proc. IEEE PESC'95, 1995, pp. [81] 202-208.
[55] C. Y. Hsu and H. Y. Wu, "A new single-phase active power filter with reduced energy storage capacity," Proc. Inst. Elect. Eng.—Elect. Power [82] Applicat, vol. 143, no. 1, pp. 25-30, Jan. 1996.
[56] H. Akagi, Y. Kanazawa, and A. Nabae, "Instantaneous reactive power compensators comprising switching devices without energy storage components," IEEE Trans. Ind. Applicat., vol. IA-20, pp. 625-630, May/June 1984.
[57] S. Bhattacharya and D. Divan, "Synchronous frame based controller implementation for a hybrid series active filter system," in Conf. Rec. IEEE-IAS Annu. Meeting, 1995, pp. 2531-2540.
[58] C. E. Lin, W. F. Su, S. L. Lu, C. L. Chen, and C. L. Huang, "Operation strategy of hybrid harmonic filter in demand-side system," in Conf. Rec. IEEE-IAS Annu. Meeting, 1995, pp. 1862-1866.
[59] L. Malesani, L. Rossetto, and P. Tenti, "Active filter for reactive power, harmonic compensation," in Proc. IEEE PESC'86, 1986, pp. 321-330.
[60] Y. Hayashi, N. Sato, and K. Takahashi, "A novel control of a current source active filter for AC power system harmonic compensation," in Conf. Rec. IEEE-IAS Annu. Meeting, 1988, pp. 837-842.
[61] Gyugyi, L. (1994). Dynamic compensation of AC transmission lines by solid-state synchronous voltage sources. Power Delivery, IEEE Transactions on, 9(2), 904-911.
[62] Singh, B., Al-Haddad, K., & Chandra, A. (1999). A review of active filters for power quality improvement. Industrial Electronics, IEEE Transactions on, 46(5), 960-971.
[63] Kmail, M. (2012). Investigation Of Shunt Active Power Filter For Power Quality Improvement (Doctoral Dissertation, Near East University).
[64] Sadeq, J. M. (2014). Comparative Study Of Passive, Series And Shunt Active Power Filters With Hybrid Filters On Nonlinear Loads (Doctoral Dissertation, Near East University).

[65] Bayod-Rújula, A. A. (2009). Future development of the electricity systems with distributed generation. Energy, 34(3), 377-383.
[66] Passey, R., Spooner, T., MacGill, I., Watt, M., & Syngellakis, K. (2011). The potential impacts of grid-connected distributed generation and how to address them: A review of technical and non-technical factors. Energy Policy, 39(10), 6280-6290.
[67] Jiang, Y. H., & Chen, Y. W. (2009, November). Neural network control techniques of hybrid active power filter. In Artificial Intelligence and Computational Intelligence, 2009. AICI'09. International Conference on (Vol. 4, pp. 26-30). IEEE.
[68] Kraimia, H. (2013). Ultra-Low Power RFIC Solutions for Wireless Sensor Networks (Doctoral dissertation, Université Sciences et Technologies-Bordeaux I).
[69] D. D. Shipp, "Harmonic analysis, suppression for electrical systems supplying static power converters, other nonlinear loads," IEEE Trans. Ind. Applicat, vol. 15, pp. 453^158, Sept./Oct. 1979.
[70] H. Akagi, Y. Kanazawa, and A. Nabae, "Generalized theory of the instantaneous reactive power in three-phase circuits," in Proc. IPECTokyo, 1983, pp. 1375-1386..
[71] L. S. Czarnecki, "Orthogonal decomposition of the currents in a 3-phase nonlinear asymmetrical circuit with a nonsinusoidal voltage source," IEEE Trans. Instrum. Meas., vol. 37, pp. 30-34, Mar. 1988.
[72] J. H. R. Enslin and J. D. V. Wyk, "Measurement, compensation of fictitious power under nonsinusoidal voltage, current conditions," IEEE Trans. Instrum. Meas., vol. 37, pp. 403^108, Sept. 1988.
[73] J. H. R. Enslin and J. D. V. Wyk, "A new control philosophy for power electronic converters as fictitious power compensators," IEEE Trans. [196] Power Electron., vol. 5, pp. 88-97, Jan. 1990.
[74] L. S. Czarnecki, "Scattered, reactive current, voltage, power in circuits with nonsinusoidal waveforms, their compensation," IEEE Trans. Instrum. Meas., vol. 40, pp. 563-567, June 1991.
[75] A. Ferrero and G. S. Furga, "A new approach to the definition of power components in three-phase systems under nonsinusoidal conditions," IEEE Trans. Instrum. Meas., vol. 40, pp. 568-577, June 1991.
[76] J. L. Willems, "A new interpretation of the Akagi-Nabae power components for nonsinusoidal three-phase situations," IEEE Trans. Instrum. Meas., vol. 41, pp. 523-527, Aug. 1992.
[77] G. Blajszczak, "Non-active power compensation using time-window method," Eur. Trans. Elect. Power Eng., vol. 2, no. 5, pp. 285-290, Sept/Oct. 1992.
[78] M. Rastogi, R. Naik, and N. Mohan, "A comparative evaluation of harmonic reduction techniques in three-phase utility interface of power electronic loads," in Conf. Rec. IEEE-IAS Annu. Meeting, 1993, pp. 971-978.
[79] J. L. Willems, "The compensation of nonactive currents for three-phase power systems in sinusoidal steady state," Elect. Mach. Power Syst, vol. 21, pp. 663-670, Oct. 1993.
[80] H. Akagi and A. Nabae, "The p-q theory in three-phase systems under nonsinusoidal conditions," Eur. Trans. Elect. Power Eng., vol. 3, no. 1, pp. 27-31, Jan./Feb. 1993.
[81] D. A. Marshall, F. P. Venter, and J. D. V. Wyk, "An evaluation of the instantaneous calculation of load current components," Eur. Trans. Elect. Power Eng., vol. 3, no. 1, pp. 53-59, Jan./Feb. 1993.
[82] J. L. Willems, "Current compensation in three-phase power systems," Eur. Trans. Elect. Power Eng., vol. 3, no. 1, pp. 61-66, Jan./Feb. 1993.
[83] L. S. Czarnecki, "Power-factor improvement of three-phase unbalanced loads with nonsinusoidal supply voltage," Eur. Trans. Elect. Power Eng., vol. 3, no. 1, pp. 67-74, Jan./Feb. 1993
[84] K. Mikolajuk and A. Tobola, "A new method for reduction of current, voltage harmonic distortion in power systems," Eur. Trans. Elect. Power Eng., vol. 3, no. 1, pp. 85-89, Jan./Feb. 1993.
[85] D. Lauria and E. Tironi, "Some considerations on active compensation devices," Eur. Trans. Elect. Power Eng., vol. 3, no. 3, pp. 235-240, May/June 1993.
[86] H. Akagi, A. Nabae, and S. Atoh, "Control strategy of active power filters using multiple voltage-source PWM converters," IEEE Trans. Ind. Applicat, vol. IA-22, pp. 460^165, May/June 1986.
[87] H. Akagi, S. Atoh, and A. Nabae, "Compensation characteristics of active power filter using multiseries voltage-source PWM converters," Elect. Eng. Jpn., vol. 106, no. 5, pp. 28-36, 1986.
[88] C. E. Lin, C. L. Chen, and C. H. Huang, "Reactive, harmonic current compensation for unbalanced three-phase system," in Proc. Int. Conf. High Technology in the Power Industry, 1991, pp. 317-321.
[89] C. E. Lin, C. L. Chen, and C. L. Huang, "Calculating approach, implementation for active niters in unbalanced three-phase system using synchronous detection method," in Proc. IEEE IECON'92, 1992, pp. 374-380.
[90] C. A. Quinn and N. Mohan, "Active filtering of harmonic currents in three-phase, four-wire systems with three-phase, single-phase nonlinear loads," in Proc. IEEE APEC'92, 1992, pp. 829-836.
[91] C. A. Quinn, H. Mohan, and H. Mehta, "A four-wire, current controlled converter provides harmonic neutralization in three-phase, four-wire systems," in Proc. IEEE APEC'93, 1993, pp. 841-846.
[92] H. Akagi and A. Nabae, "The p-q theory in three-phase systems under nonsinusoidal conditions," Eur. Trans. Elect. Power Eng., vol. 3, no. 1, pp. 27-31, Jan./Feb. 1993.