On the performance of AWGN and multipath aeronautical channels using punctured turbo codes

Gini Elsy Cherian
PG Scholar
Department of Electronics and Communication
Mangalam College of Engineering, Ettumanoor, Kottayam

***Abstract* — The performance analysis and design of punctured turbo codes on the aeronautical channel is considered. Turbo codes can be used to provide a robust error correction solution to combat channel fading which is a main limiting factor that should be handled in aeronautical communication. The data to be transmitted is encoded using two rate 1/2 recursive systematic convolutional (RSC) encoders concatenated in parallel and punctured to obtain an overall code rate of 1/3. The encoded data is up converted and transmitted into multipath aeronautical channel and the received signal is demodulated and passed onto iterative turbo decoder. The performance evaluation of punctured turbo coded scheme on aeronautical communication channel and effect of different decoding algorithms are compared.**

***Index Terms*— Non Systematic Convolutional coding, Log Likelihood Ratio, concatenated coding, interleaving, puncturing, fading channels, MAP decoder, log MAP decoder, Max log MAP decoder, Recursive Systematic Convolutional coding, iterative decoding.**

I. INTRODUCTION

It is a known fact that wireless communication systems are becoming more ubiquitous due to their portability and mobility with a variety of enhancements. However, as the number of users continues to rise and the demand for better services requiring high transmission rates increases; more pressure is put on the coding techniques and modulation schemes. According to Shannon, increasing the transmission rate may minimise error occurrence as long as the rate was still below the channel capacity [1]. In a digital transmission system, error control is achieved by the use of channel coding schemes. Channel coding schemes help to reduce the BER and improve reliability of information transmission. Turbo codes are a class of convolution codes whose performance in terms of Bit Error Rate are close to the Shannon limit [2] by using simple component codes and interleavers. It is possible to operate turbo codes within 0.7dB of the Shannon limit.

Turbo codes have a wide range of applications in 3G mobile communications, deep sea communications, satellite communications and other power constrained fields. The use of turbo codes enhances the data transmission efficiency in digital communications systems. With the rapid development of the air transport industry, ongoing growth in data traffic will lead to bottlenecks in aeronautical communication. Therefore, aeronautical communication has to increase channel efficiency. In order to fulfil the requirements of the high spectrum efficiency and system capacity in the aeronautical communications, appropriate coding schemes should be adopted. Therefore, it is significant to analyze and compare the performance of proposed turbo coding scheme in aeronautical channels.

This paper gives a brief overview of the encoding and decoding mechanism of the turbo coding scheme, describes the *maximum a posteriori* (MAP) algorithm and address a few implementation issues of the MAP algorithm and modifies the traditional MAP algorithm [3]. Performance comparison of different Decoding algorithms is also carried out. Simulations of Turbo code performance under AWGN single path and multipath channels are made and the effects of different turbo decoders are also discussed in the channel.

Descriptions of the system model is given in section II which discuss the turbo encoding and decoding principle together with characteristics of an aeronautical channel, and in section III simulation and experimental results are presented which compare the performance of different turbo decoding schemes sent over an AWGN channel. Section IV concludes the paper and brings up the possible future works.

II. SYSTEM MODEL

The binary data is encoded using a rate 1/3 turbo encoder, punctured and modulated using BPSK signaling. The up converted signal is then transmitted into the aeronautical channel which is modeled as single path and multipath AWGN channel for initial testing purpose. The received signal is demodulated and demultiplexed before passing to the iterative turbo decoder. The decoded bits are compared with the initial data for BER calculation. These steps are summarized in Fig.1.

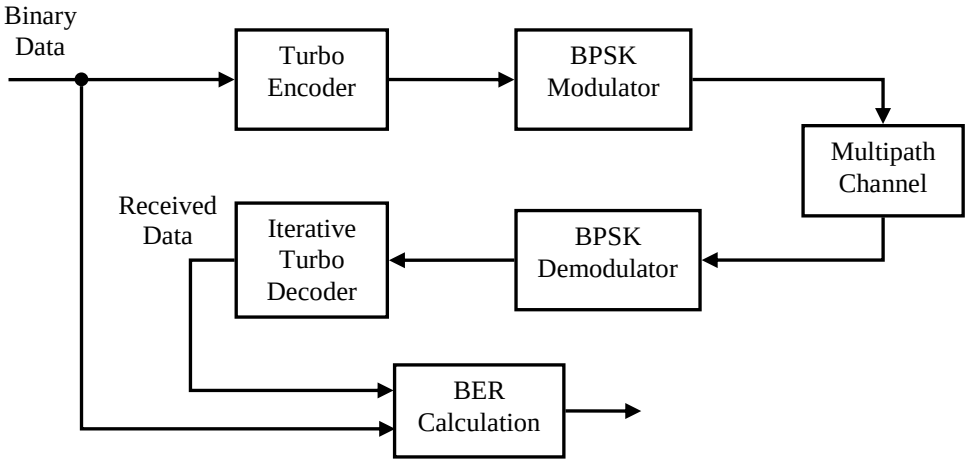

Figure 1 Block Diagram System model

It is theoretically possible to approach the Shannon limit by using a block code with large block length or a convolutional code with a large constraint length. The processing power required to decode such long codes makes this approach impractical. Turbo codes overcome this limitation by using recursive coders and iterative soft decoders. The recursive coder makes convolutional codes with short constraint length appear to be block codes with a large block length, and the iterative soft decoder progressively improves the estimate of the received message. In short, high coding gain of turbo codes are due to Parallel concatenated coding scheme to allow simpler decoding, Pseudo-random interleaving to provide better weight distribution and Iterative decoding to enhances decoder decisions.

A. TRANSMITTER

The fundamental turbo encoder is built using two identical RSC encoders in addition to an interleaver [4]. The RSC encoder is obtained from the conventional non recursive convolutional encoder by feeding back one of its encoded outputs to its input. The encoder comprises of two [1, 5/7] RSC encoders with constraint length K = 3 concatenated in parallel. The two convolutional encoders used in the Turbo code are identical with generator polynomials given by,

$g_1(D) = 1 + D1 + D_2$

$g_2(D) = 1 + D_2$

The input to the second decoder is an interleaved version of the systematic input d, thus the outputs of coder 1 and coder 2 are time displaced codes generated from the same input sequence. The input sequence is only presented once at the output. The output parity bit at k^{th} time instant p_k is recursively calculated as

$p_k = d_k + \sum_{i=0}^{K-1} g'_i \; p_{k-i} \bmod 2$

Where g'_i is respectively equal to g_{1i}, if we consider RSC1 and to g_{2i}, for RSC2 where $g_{1i} = [1\ 1\ 1]$, $g_{2i} = [1\ 0\ 1]$. The outputs of the two rate 1/2 coders may be punctured into data stream giving a rate 1/3 code. The signal is then BPSK modulated and transmitted onto the aeronautical channel. Figure 2 shows the turbo encoder used.

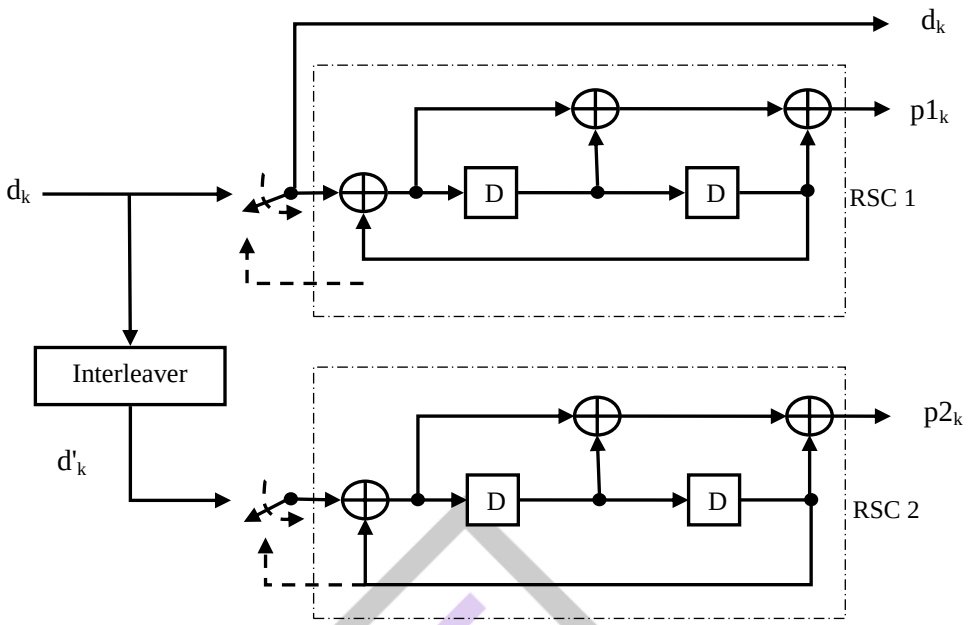

Figure 2 Turbo encoder

The operation of the encoder can be represented by a state diagram which consists of four states S = {00, 01, 10, 11}. The nodes are connected by branches and are labelled by the input symbol and the corresponding output symbol. Figure 3 shows the state diagram of the RSC encoder described.

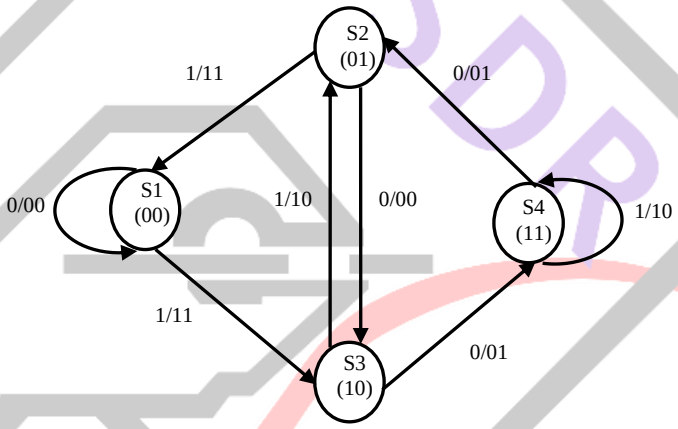

Figure 3 State diagram of the RSC encoder

The interleaver is a very important constituent of the turbo encoder. It spreads the burst error pattern and also increases the free distance. Thus, it allows the decoders to make uncorrelated estimates of the soft output values. The convergence of the iterative decoding algorithm improves as correlation of the estimates. Puncturing [5] is a technique used to increase the code rate. A code rate is increased by multiplexing the two coded streams. The multiplexer can choose the odd indexed outputs from the output of the upper RSC encoder and its even indexed outputs from the lower one. In a more complicated system, puncturing tables are used.

B. AERONAUTICAL CHANNEL MODEL

The aeronautical channel model divided the flight into four different scenarios: En-route, Arrival, Taxi and Parking. Each of these scenarios has its own parameters which is characterizing the type of fading, Doppler, and delay. A class of aeronautical wide-band channel featuring En-route, Arrival, Taxi and Parking scenarios for ground–air and air–air links is explained in [6]. This model describes the propagation between aircraft and ground terminal as multipath propagation resulting from reflections and scattering of the propagating electromagnetic field by objects in the propagation environment. Each channel scenario can be simulated using a tapped delay line model with the corresponding parameters. Table 2.1 provides the typical and worst case parameter sets are suggested in [6].

Table 2.1 Aeronautical channel characteristics

Parameters/Scenarios	**En-Route Scenarios**	**Arrival/Takeoff Scenarios**	**Taxi Scenarios**	**Parking Scenarios**
Aircraft Velocity(m/s)	17 - 440	25 - 150	0 - 15	0 – 5.5
Rice Factor(dB)	2 -20	9 - 20	6.9	0

Exp or Two Ray path model	Two Ray	Two Ray	Exp	Exp
Beam Angle (in degrees)	3.5	180	360	360
Worst case delay (in micro sec)	33 - 200	7	7	7

C. RECEIVER

The received signal is demodulated and demultiplexed before passing onto the iterative turbo decoders. The key idea on which iterative decoding is based on is that each decoder produces a soft estimate of the original information bits, this estimation is used by the other decoder, to produce a better estimation. The received versions of the systematic data and the parity output from the first encoder are sent to the first MAP decoder, while the interleaved versions of the received systematic data and the second parity data are passed to the second MAP decoder as shown in Fig.4.

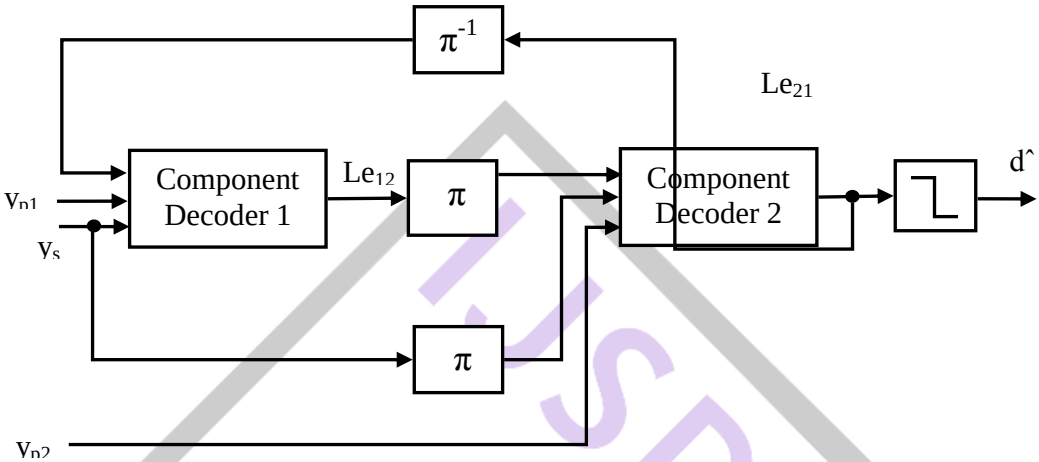

Figure 4 Turbo decoder

The binary rate 1/3 RSC encoder described by the generator polynomials [1, 5/7] has 4 states, $\{S_1, S_2, S_3, S_4\}$ and a section of the trellis diagram is presented in Fig.5. Here, a solid line denotes the transition due to a message bit 0 and a dashed line implies that the branch was generated by a message bit 1. Each branch is labelled with the associated two bit codeword x_k.

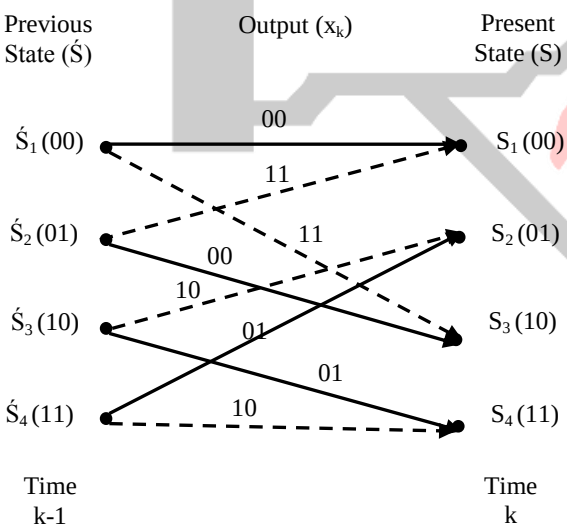

Figure 5 Trellis section for [1, 5/7] RSC

Assuming that at time k, the previous state $S_{k-1} = ś$ and the present state $S_k = s$. The input bit which caused the transition between these states is u_k and the decoder received the symbol y_k. The MAP decoding process is done with conditional Log Likelihood Ratio $L(u_k | y)$ using the equation below.

$$L(u_k | y) = \ln \frac{\sum_{R1} P(ś,s,y)}{\sum_{R0} P(ś,s,y)}$$

$$= \ln \frac{\sum_{R1} \alpha k-1(ś)\ \gamma k(ś,s)\ \beta k(s)}{\sum_{R0} \alpha k-1(ś)\ \gamma k(ś,s)\ \beta k(s)}$$

Where, given that x_{kl} and are y_{kl} individual bits within the transmitted and received code words x_k and y_k, n is the number of these bits in each codeword, E_b is the transmitted energy per bit, σ^2 is the noise variance, a is the fading amplitude, P (u_k) is the *apriori* probability of input bit,

Transition probability γ_k (ś, s) can be calculated using the following equation

γ_k (ś, s) = P (y_k|x_k) P (u_k)

$= \prod_{l=1}^{n} \frac{1}{\sqrt{2\pi}\,\sigma} \exp(-\frac{E_b R}{2\sigma^2} (y_{kl} - ax_{kl})^2)$ P (u_k)

Forward estimation state probabilities α_k (s) is obtained from

α_k (s) = $\sum_{ś} \gamma_k$(ś, s) α_{k-1} (ś)

The initial conditions for this recursion are

α_0 (s) = $\begin{cases} 1, s = 0 \\ 0, s \neq 0 \end{cases}$

Backward estimation state probabilities β_k (s) is given by

B_{k-1} (ś) = $\sum_s \beta_k$(s) γ_k (ś, s)

The initial conditions in an all-zero terminated trellis are

β_N (s) = $\begin{cases} 1, s = 0 \\ 0, s \neq 0 \end{cases}$

The transition probability γ_k (ś, s) can be calculated as soon as the channel output y_{kl} is received. Then, the forward recursion expression can be used to find the α_k (ś, s) values. Once all the channel values have been received, and γ_k (ś, s) has been calculated for all the values k=1, 2 ... N, the backward recursion can be used to calculate the β_k (ś, s) values. Finally, all the calculated values of α_k (ś, s), β_k (ś, s) and γ_k (ś, s) are used to calculate the values of L (u_k | y). The MAP decoder makes a decision by comparing the value of L (u_k | y) value to a zero threshold. If L (u_k | y) > 0 then, estimated bit, $\hat{u}_k$ = 1 and if L (u_k | y) < 0, $\hat{u}_k$ = 0.

MAP decoding algorithm needs to perform many multiplications. In order to reduce this computational complexity several simplifying versions have been proposed. The log MAP and the max log MAP algorithms [7] substitute additions for multiplications using log domain as

Γ_k(ś, s) = ln (γ_k (ś, s))

$= \ln C_k + \frac{1}{2} u_k L(u_k) + \frac{Lc}{2} \sum_{l=1}^{n} y_{kl} x_{kl}$

A_k(s) = ln (α_k(s))

= max* {A_{k-1}(ś) + Γ_k(ś, s)} $A_0(s) = \begin{cases} 0, & s = 0 \\ -\infty, & s \neq 0 \end{cases}$

B_{k-1}(s) = ln (β_{k-1} (s))

= max* {B_k(ś) + Γ_k(ś, s) $B_N(s) = \begin{cases} 0, & s = 0 \\ -\infty, & s \neq 0 \end{cases}$

Where

$\max^*(a, b) = \begin{cases} \max(a,b) + \ln(1 + e^{-|a-b|}) & \text{log MAP algorithm} \\ \max(a,b) & \text{max log MAP algorithm} \end{cases}$

The likelihood ratio is expressed as

L (u_k| y) = $\max^*_{R1}$ [A_{k-1}(ś) + Γ_k(ś, s) + B_k(s)] – $\max^*_{R0}$[A_{k-1}(ś) + Γ_k(ś, s) + B_k(s)]

The iterative decoding procedure can be summed up as follows:

- For the first iteration we arbitrarily assume L (u_k) = 0, then the MAP Decoder 1 outputs the extrinsic information L_e (u_k | y) on the systematic bit it gathered from the first parity bit.
- After appropriate interleaving the extrinsic information L_{e1} (u_k | y) from decoder 1, is delivered to decoder 2 as L_1(u_k), a more educated guess on L (u_k). Then decoder 2 outputs L_{e2} (u_k | y), its own extrinsic information on the systematic bit based on the other parity bit. After suitable de interleaving, this information is delivered to decoder 1 as L_2(u_k), a newer and more educated guess on L (u_k).
- After a prescribed number of iterations when a stop criterion is reached, the LLR L_2 (u_k | y) at the output of decoder 2 is de interleaved and delivered as L (u_k | y) to the hard decision device, which in turn estimates the information bit only based on the sign of the de interleaved LLR,

$\hat{u}_k$ = sign [L (u_k | y)] = sign {P^{-1}[L_2 (u_k | y)]}.

The estimated bit $\hat{u}_k$ is compared with the initial data u_k bit to calculate the BER.

III. Simulation And Performance Analysis

In this section we present results of uncoded and turbo coded data transmitted over a single path additive white Gaussian noise (AWGN) channel, and the fixed multi path AWGN channel. Performance comparison of different turbo decoding schemes is also provided. Block length of only 1000 bits is considered in this simulation because of the high latency. The turbo decoder converges after 4 to 6 iterations.

As compared with uncoded data transmission over single path and multipath AWGN channel, turbo coded data transmission over the same channel is having better error correcting capability. At a BER of 10^{-2}, uncoded transmission over single path and multipath channel provides a SNR of 2.5 dB where as the turbo coded transmission for the same channel at a BER of 10^{-2} has only

0.5 dB as shown in Fig.6. So it is clear from the simulation that turbo codes can combat the multipath fading effects prominent in multipath aeronautical channel.

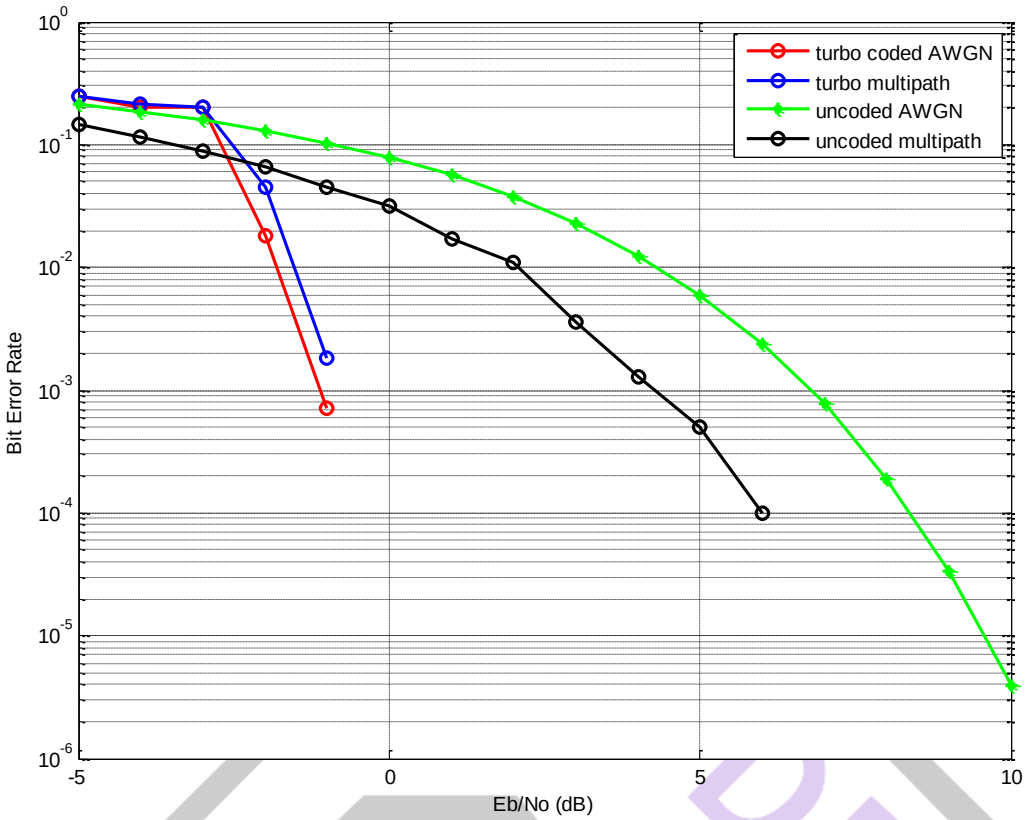

Figure 6 Performance analysis of turbo codes over AWGN and multipath channel

Simulation is also carried out for BER comparison between different component decoders that can be used for iterative turbo decoding like MAP decoder, Max Log MAP decoder and Log MAP decoder. From the Fig.7, it is clear that, till 0.2 dB, Log MAP decoder exhibits better performance and beyond 0.2dB Max Log MAP decoder outperforms all other decoders.

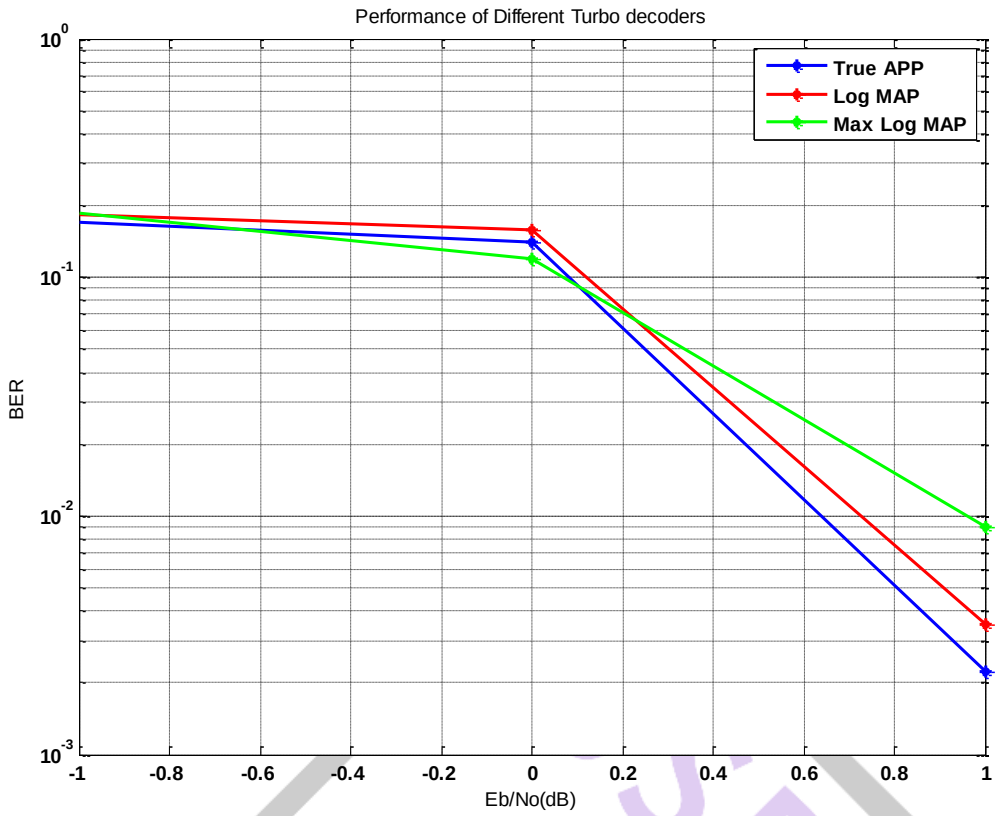

Figure 7 Performance comparison of different turbo decoders

IV. Conclusion And Future Works

In this paper, we have described the techniques used for the encoding and decoding of turbo codes. Such an iterative decoder employs two component soft-in soft-out decoders, and we have described the MAP, Log-MAP and Max-Log-MAP algorithms, which can all be used as component decoders. The MAP algorithm is optimal for this task, but it is extremely complex. The Log-MAP algorithm is a simplification of the MAP algorithm, and offers the same optimal performance with a reasonable complexity. We also discussed on how turbo decoding can significantly enhance the performance of a BPSK transmitted data stream over a multipath channel. At a BER of 10^{-2}, uncoded transmission over single path and multipath channel provides a SNR of 2.5 dB. The iterative nature of turbo decoding enables us to achieve this significant coding gain in a multipath environment.

The work currently focuses on performance analysis based on coherent detection and perfect knowledge of channel response. Future work focuses on estimating the unknown channel parameters and analysing the performance of the turbo coded aeronautical communication system incorporating the use of higher order modulation schemes, and an equalizer to further enhance the gains.

Reference

[1] C.E.Shannon, "A Mathematical theory of communication, “Bell, Syst.Techn.”, Journal, vol.27, no.2, pp. 623-656 Oct 1948.

[2] Berrou, C. and Glavieux, A., “Near Optimum Error Correcting Coding and Decoding: Turbo-Codes,” *IEEE Trans. on Communications, vol. 44, no. 10, October 1996, pp. 1261-1271.*

[3] J. P. Woodard, L. Hanzo, "Comparative Study of Turbo Decoding Techniques: An Overview, " IEEE Transaction on Vehicular Technology, vol. 49, no. 6, pp. 0018-9545, November 2000.

[4] C. Berrou, A. Glavieux, and P. Thitimajshima, “Near Shannon Limit Error-Correcting Coding and Decoding: Turbo-Codes,” in *ICC 1993*, (Geneva, Switzerland), pp. 1064–1070, May 1993.

[5] J. B. Cain, G. C. Clark, Jr., and J. M. Geist, “Punctured Convolutional Codes of Rate ($n¡1$)=n and Simplified Maximum Likelihood Decoding,” *IEEE Trans. on Information Theory*, vol. IT-25, pp. 97–100, Jan 1979.

[6] E. Haas, "Aeronautical channel modeling," *Vehicular Technology, IEEE Transactions on*, vol. 51, pp. 254-264, 2002.

[7] J. P. Woodard, L. Hanzo, "Comparative Study of Turbo Decoding Techniques: An Overview, " IEEE Transaction on Vehicular Technology, vol. 49, no. 6, pp. 0018-9545, November 2000.