Optimization of Load Frequency Control by Simulated Annealing Applying IAE and ITAE Criteria

[1] Kiran Kushwaha, [2]Ram Kumar Denjare

[1]Research Scholar (M. Tech.), [2]Assistant Professor
Dept of Electrical Engineering, Kalinga University, New Raipur, Chhattisgarh

***Abstract* - In an interconnected power system, if a load demand changes randomly, both frequency and tie line power varies. The main aim of load frequency control is to minimize the transient variations in these variables and also to make sure that their steady state errors is zero. Many modern control techniques are used to implement a reliable controller. The objective of these control techniques is to produce and deliver power reliably by maintaining both voltage and frequency within permissible range. When real power changes, system frequency gets affected while reactive power is dependent on variation in voltage value. That's why real and reactive power is controlled separately. Control of load frequency controls the active power. The role of automatic generation control (AGC) in power system operations with reference to tie line power under normal operating conditions is analyzed .The main purpose of system generation control is to balance the system generation against the load and losses so that the desired frequency and power interchange between neigh boring systems are maintained.. This thesis studies the reliability of various control techniques of load frequency control of the proposed system through simulation in the MATLAB-Simulink environment**

***Index Terms* : Load Frequency Control , Simulated annealing , PID, IAE , ITAE**

I.INTRODUCTION

In power system, both active and reactive power demands are never steady as they changes continuously with the rising or falling trend. The voltage and frequency controller has gained importance with the growth of interconnected system and has made the operation of power system more reliable. Many investigations in the area of AVR of an isolated power system have been reported and a number of control schemes like Proportional and Integral (PI), Proportional, Integral and Derivative (PID) and optimal control have been proposed to achieve improved .A proportional-integral-derivative (PID) controller is a generic feedback controller widely used in industrial control systems, process control, motor drive, and instrumentation. Despite the popularity, the tuning aspect of PID coefficients is a challenge for researchers and plant operators. The conventional method exhibits relatively poor dynamic performance as evidenced by large overshoot and transient frequency oscillations

In general, LFC is accomplished by two different control actions: primary control and supplementary control. When load changes, the primary speed control perform the initial re-adjustment of the frequency and tie-power by the action of governor itself. The governor will try to minimize the frequency and tie line power deviation to zero by manipulating input to the turbine. The supplementary control action is used to minimize the frequency deviation, if persist after primary control, to zero through integral control action. To improve the stability of the power networks, it is necessary to design Load Frequency Control (LFC) systems that control the power generation and active power.

There are different algorithms to optimize the controller gains for load frequency control of an interconnected power system like Genetic Algorithm (GA) but this one is difficult to implement because of its complexity in coding and low speed of convergence. This paper deals with reduction of error in LFC of the proposed system through simulation in the MATLAB-Simulink environment. The computer simulations illustrate the results. It also makes a comparison between the PSO and SA technique and different error criteria. The objective of this work is to design and implement SA-PID controller to search the optimal parameter for efficient control of voltage. The model of the AVR of single area power system is designed using simulink in MATLAB.

II. LOAD FREQUENCY CONTROL LOOP

In an interconnected power system, LFC and AVR equipment are installed for each generator. The schematic diagram of the voltage and frequency control loop is represented in Fig.1. The controllers are set for a particular operating condition and take care of small changes in load demand to maintain the frequency and voltage magnitude within the specified limits. Small changes in real power are mainly dependent on changes in rotor angle δ and, thus, the frequency f. The reactive power is mainly dependent on the voltage magnitude (i.e. on the generator excitation). Change in angle δ is caused by momentary change in generator speed. Therefore, load frequency and excitation voltage controls are non-interactive for small changes and can be modeled and analyzed independently

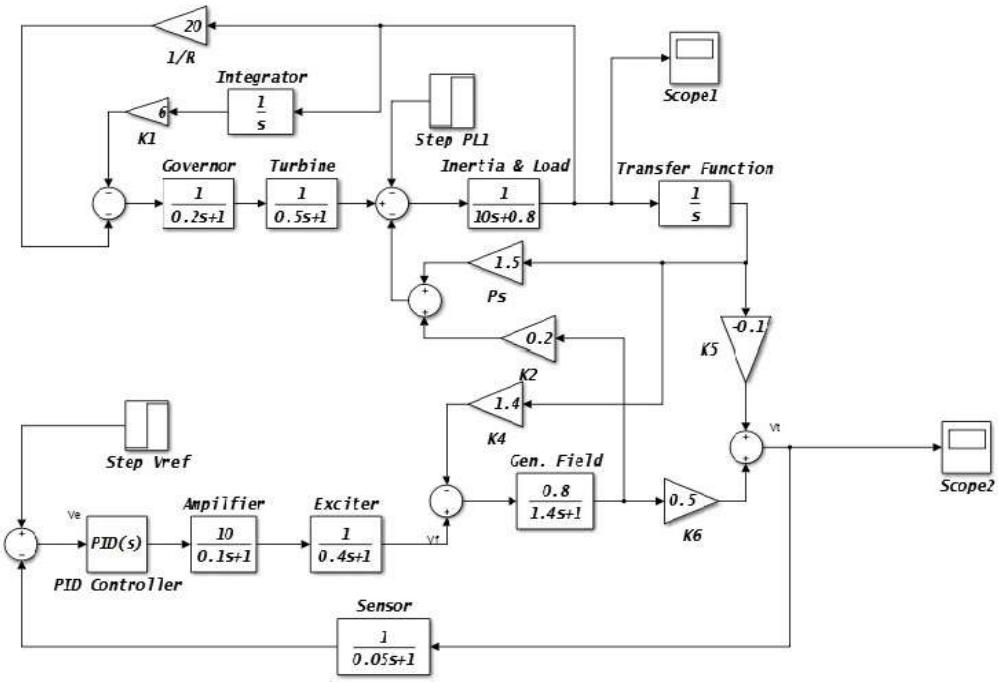

Fig.1 : LFC Control Loop

For understanding the control action of LFC, consider the non-reheat thermal power system shown in Fig.1. The basic block of power generating unit consists of the combination of governor, turbine and generator. As the load varies, the speed/frequency of the generator changes. The speed governor helps to match active power generation with the demand by controlling the throttle valves which monitor the steam input to the turbine. Governors are used to sense the frequency bias caused by load change and cancel it by varying the input of the turbine. The turbine unit is used to transform the natural energy, such as the energy from steam or water, into mechanical power which is supplied to the generator. The generator unit of the power systems converts the mechanical power received from the turbine into electrical power. But for LFC, the focus is on the rotor speed output (frequency of the power systems) of the generator instead of the energy transformation.

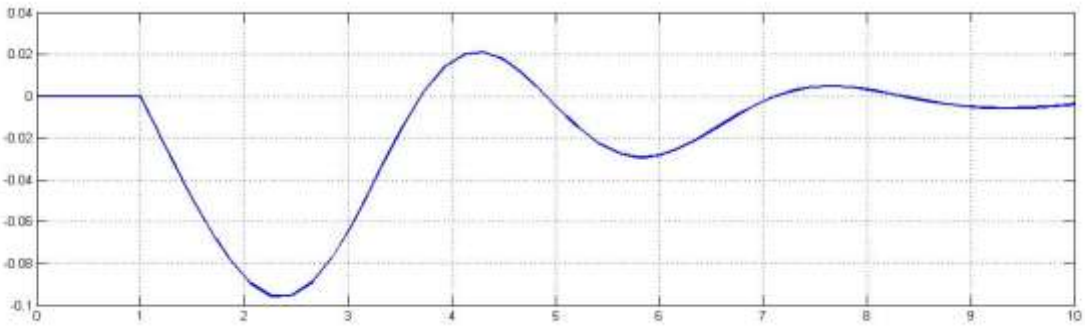

Fig. 2 : Frequency Output

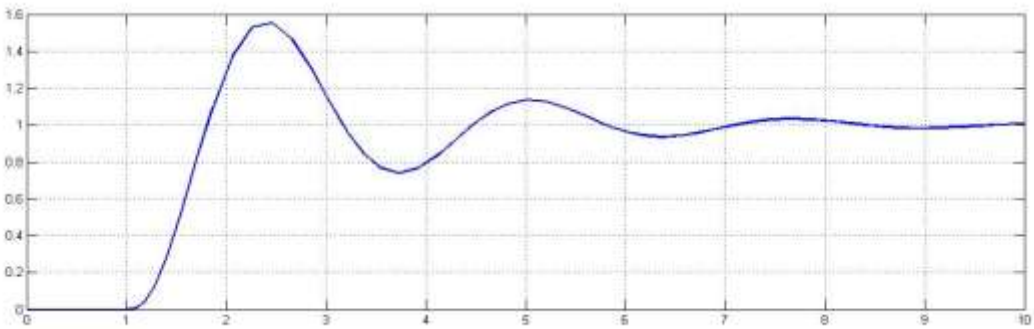

Fig. 3 : Voltage Output

III. SIMULATED ANNEALING (SA)

Simulated Annealing is a probabilistic technique for approximating the global optimum of a given function. Specifically, it is a meta-heuristic to approximate global optimization in a large search space. It is often used when the search space is discrete (e.g., all tours that visit a given set of cities). For problems where finding the precise global optimum is less important than finding an acceptable local optimum in a fixed amount of time, simulated annealing may be preferable to alternatives such as brute-force search or gradient descent. Simulated annealing interprets slow cooling as a slow decrease in the probability of accepting worse solutions as it explores the solution space. Accepting worse solutions is a fundamental property of meta-heuristics because it allows for a more extensive search for the optimal solution.

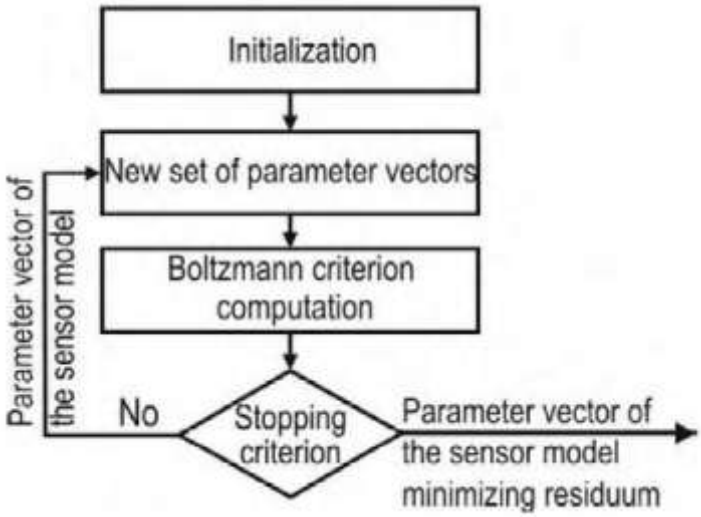

Fig.4 : Flowchart of SA

The whole process consists of three steps i.e. firstly is the model preparation, secondly preparation of objective function, then the last comes the application of optimization technique.

CASE 1: LFC INTEGRAL SQUARE ERROR (IAE)

Figure show the simulation model of LFC with having Integral Absolute Error criteria. From the simulation the graph is generated. This is as shown below.

$$IAE = \int_0^{\infty} |e(t)| dt$$

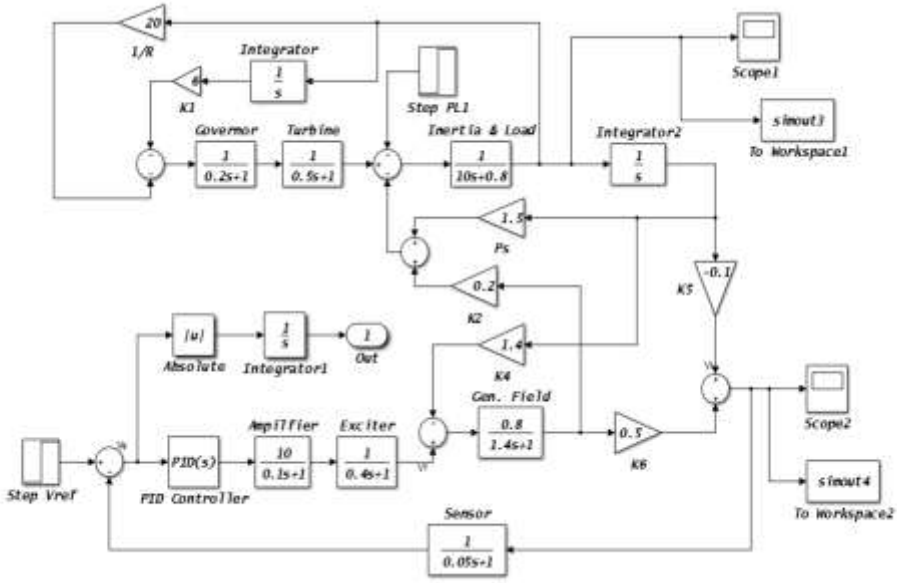

Figure.5 : LFC with IAE (a_iae)

A. *Objective Function*

Objective function (required) is the function that want to minimize. Specify the function as an anonymous function or as a function handle of the form @objfun, where objfun.m is a function file that returns a scalar function value. After the model preparation ,the next comes the objective function by which the three variables' value is to be calculated. This is basically a MATLAB Programming. In which all the variables in the model i.e. Kp, Ki and Kd values are assign to x(1) ,x(2) and x(3) respectively. This values of x(1) x(2) and x(3) are show on MATLAB workspace

B.*Programming*

```
function y = b_iae(x)
assignin ('base','Kp', x(1));
assignin ('base','Ki', x(2));
assignin ('base','Kd', x(3)); % assign variable into MATLAB workspace
 [t,xx,y_out]=sim ('a_iae.mdl',[0  30] );
 y = y_out(end);% evaluate objective function
```

There will be two graphs shown in the scope .One will be the Frequency output and another will be the Voltage output of load frequency control as automatic voltage regulator is also connected with it. The graph will be shown in scope1 and scope2 respectively

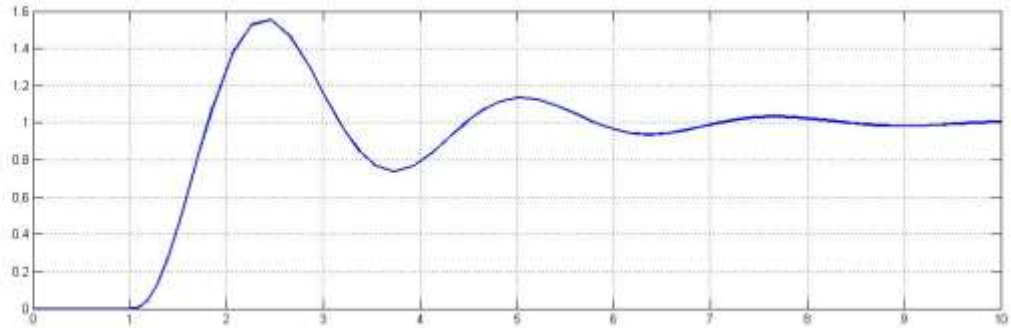

Fig. 6: Graph of LFC frequency output with IAE (b_iae)

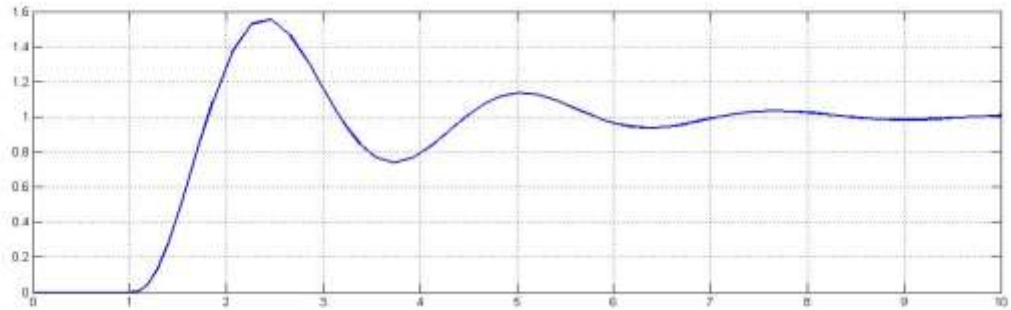

Fig. 7 : Graph of LFC Voltage output with IAE (b_iae)

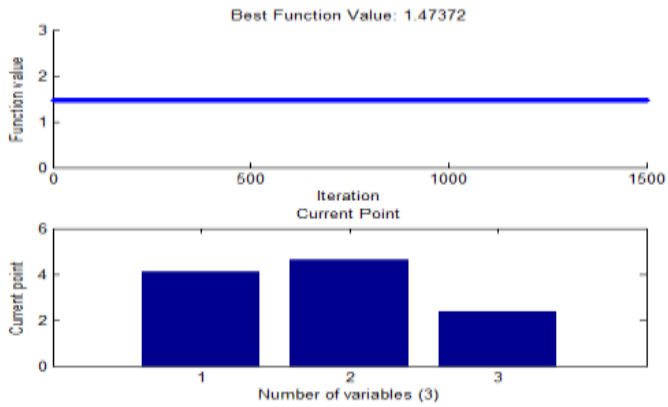

Fig. 8 : Function value ,Current point

Now on running the simulation and applying simulated annealing the graph is obtained which gives the value of PID with number of iteration

Case 2: LFC Integral Time Absolute Error (ITAE)

Figure show the simulation model of AVR using Integral Time Absolute Error criteria. From the simulation the graph is generated. This is as shown below

$$ITAE = \int_0^{\infty} t|e(t)|dt$$

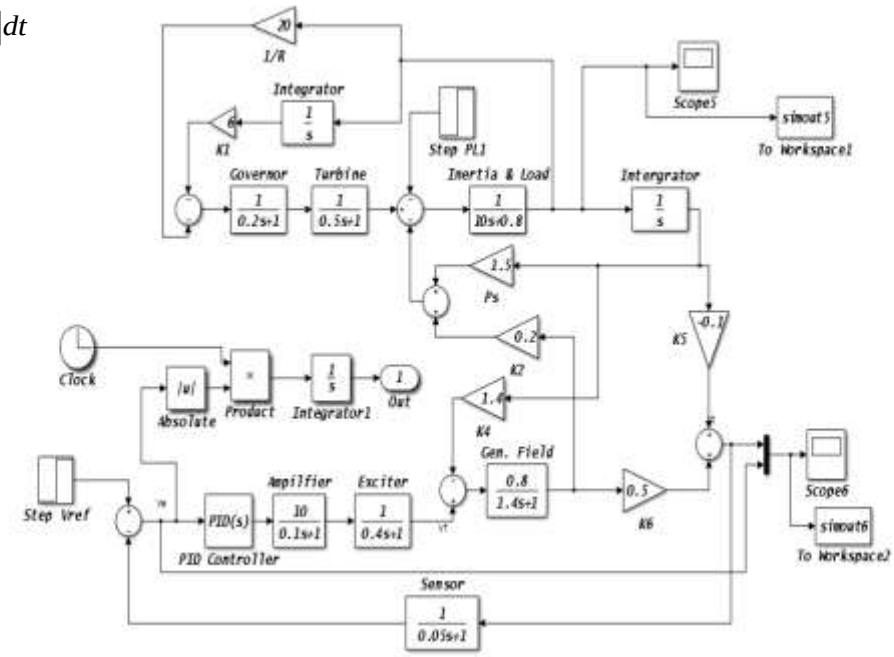

Fig. 9: LFC with ITAE (a_itae)

After the model preparation,the next comes the evaluation of objective functionby which the three variables' value is to be calculated. This is basically a MATLAB Programming , in which all the variables in the model i.e. K_p, K_i and K_d values are assign to x(1) ,x(2) and x(3) respectively. This values of x(1) , x(2) and x(3) are show on MATLAB workspace.

Programming

```
function y = b_itae(x)
assignin ('base','Kp', x(1));
assignin ('base','Ki', x(2));
assignin ('base','Kd', x(3)); % assign variable into MATLAB workspace
[t,xx,y_out]=sim ('a_itae.mdl',[0  30] );
y = y_out(end);% evaluate objective function
```

Third step is the application of SA technique in the run model. As using MATLAB 12.0, it provides direct accesses to simulated annealing technique. This provides the best fitness function and best value for the model. It randomly through value and check for the best, and after different iteration it provides the best fitness function and original value of variables that shows the best value for the model the with minimizing the error

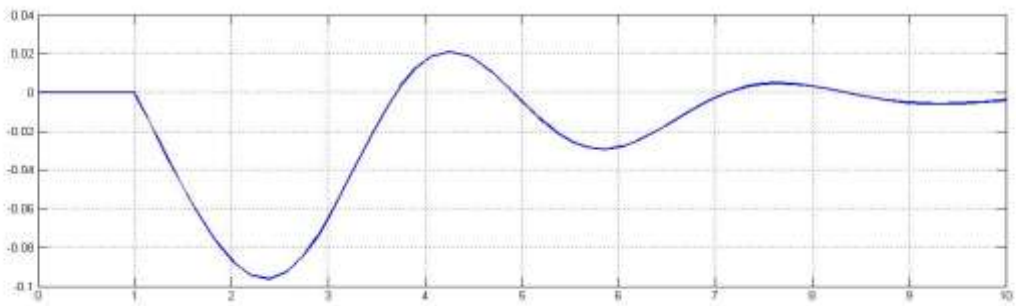

Fig. 10 : Frequency output of LFC with ITAE

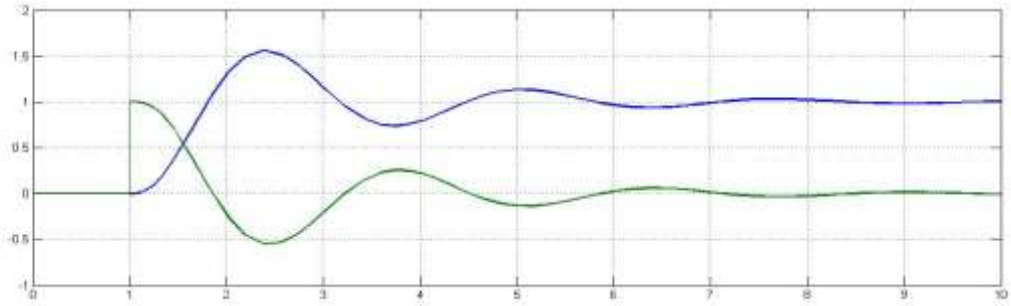

Fig. 11: Voltage output of LFC with ITAE

LFC		Rise Time	Settling time	Settling min	Settling max	Overshoot	Under-shoot	Peak	Peak time
1.	IAE scope4	3.6005	69.6004	0.7385	1.5538	54.2532	0	1.5538	22
2.	ITAE scope6	3.4492	63.4841	0.7388	1.5594	55.9490	0	1.5594	22

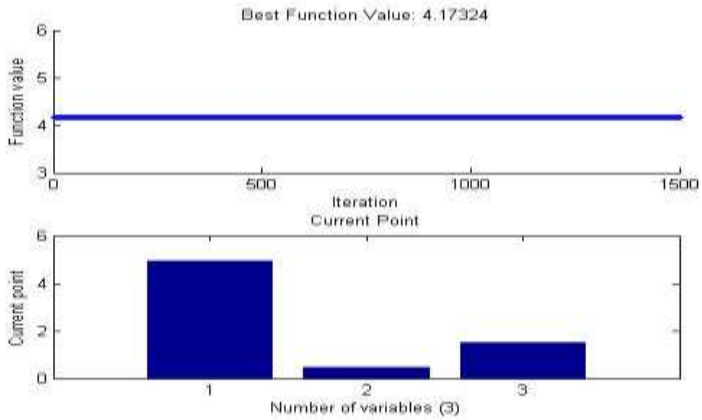

Fig.12 : Values of variables on simulation

Table shows the value of P ,I ,D using both criteria
Where
K_p = Proportional controller
K_i = Integral controller
K_d= Derivative controller

Values Criteria	**K_p**	**K_i**	**K_d**
IAE	4.1269	4.6150	2.3660
ITAE	4.9296	0.4724	1.4979

After the completion of all above steps, for knowing the values of output step response of both the cases.I have used a command
S = stepinfo (ScopeData(: , 2))

The table shows the step information of the graph .This show that how both the criteria provide different response and reduce overshoot. It reduces the error in the system

Rise time: Time taken by signal to change from low value to specified high value
Settling time: Time elapsed from instantaneous step input to time of output
Settling min: Minimum value of y once the response has risen
Settling max: Maximum value of y once the response has risen
Overshoot: Percentage overshoot (relative to yout)
Undershoot: Percentage undershoot
Peak: Peak absolute value of y
Peak time: Time at which this peak is reached

S = stepinfo (y, t) uses the last sample value of y as steady-state value yfinal.

S = stepinfo (y) assumes t = 1: ns.

IV. Conclusion

In this paper a PID controller which is tuned via SA has been strongly proposed for the multi area LFC problem. The results declared that SA based PID is capable to guarantee robust stability and robust performance under various load conditions and changes in system . The results obtained by simulation of LFC reveals the superiority of the simulated annealing over the other criteria. The different criteria of error reduction have their own advantages and disadvantages in the different optimization problems. In this section I have searched and concluded from the table that ITAE criteria better than IAE. The quality of the power supply is determined by the constancy of frequency and voltage. Minimum frequency deviation and good terminal voltage response are the characteristics of a reliable power supply. The conventional controllers used for this problem have large settling time, overshoot and oscillations. Hence, when evolutionary algorithms are applied to control system problems, their typical characteristics show a faster and smoother response .Thus , this paper summarizes a number of current developments in simulated annealing. It includes both theoretical aspects of simulated annealing and its variants and some potential applications which incorporate the use of simulated annealing.

REFERENCES

[1] M. Soroush, M. Ali, S. Mohammad, and A. mohammad, “Tuning of PID Controller for Multi Area Load Frequency Control by Using Imperialist Competitive Algorithm,” ISSN2090-4304Journal of Basic and Applied Scientific Research, 2012.
[2] TAN Wen, “Load Frequency Control: Problems and Solutions,” Proceedings of the 30thChinese Control Conference, Yantai, China, July 22-24, 2011.
[3] A. Bensenouci, A. M. Abdel Ghany, “Performance Analysis and Comparative Study of LMI-Based Iterative PID Load-Frequency Controllers of a Single-Area Power System,”WSEAS Transactions on power systems Issue 2, Volume 5, April 2010.
[4] M. Ahmed, “AI-Based Decentralized Load Frequency Controllers for Interconnected Power Systems,” Cairo, master of science, 2009.
[5] M. E-D. Mandour, E. S. Ali, and M. E. Lotfy, “Robust Load Frequency Controller Design Via Genetic Algorithm and H∞,” Modern Electric Power Systems, Wroclaw, Poland MEPS’10 – paper P16, 2010.
[6] A. Kumar, A. Ahmad, A. Grover, and U. Gupta, “Load Frequency Control Using Fuzzy Logic,” International Journal of Scientific and Research Publications, Volume 2, Issue 7, 1ISSN 2250-3153, July 2012.
[7] E. Salim Ali , S. M. and Abd-Elazim, “Optimal PID Tuning for Load Frequency Control Using Bacteria Foraging Optimization Algorithm,” Proceedings of the 14th International Middle East Power Systems Conference (MEPCON’10), Cairo University, Egypt, December 19-21, Paper ID 191, 2010.
[8] A. Khodabakhshian (Ph.D.) N. Golbon (M. Sc)“Uniified PID Design for Load Frequency Control” Proceedings of the 2004 IEEE International Conference on Control Applications Taipei, Taiwan, September 2-4, 2004.
[9] RanuvaNageswaraRao, P.Rama Krishna Reddy “PSO based tuning of PID controller for a Load frequency control in two area power system” International Journal of Engineering
[10] Kothari and Nagrath, “Power System Engineering”2nd edition, Tata McGraw-Hill Education,2008.
[11] HadiSaadat, “Power System Analysis” Tata McGraw-Hill Education,2010.
[12] Phillip David Power, “Non Linear Multi Layer Perceptron Channel Equalization”, and Simulated annealing Optimization", in IEEE Transactions,The Queen University of Belfast, April 2001.
[13] Jacob D. Griesbach and Delores M. Etter,“Fitness-Based Exponential Probabilities for Simulated annealings Applied to Adaptive IIR Filtering”, in IEEE Transactions, Department of Electrical and Computer Engineering University of Colorado Boulder.
[14]H.D.Mathur and H.V.Manjunath, “Frequecny stabilization using fuzzy logic based controller for multi-area power system”, The South Pacific Journal of Natural Science, 4(2007), 22-30.
[15] M.A. Panduro et al, “A comparision of Genetic algorithm, Particle Swarm Optimization and the Differential Evolution methods for the design of Scannable circular antenna arrays”, Progress in Electromagnetic Research, Vol. No. 13, pp171-186, 2009
[16] Zwe-Lee Gaing, “A particle Swarm Optimization approach for optimum design of PID controller in AVR system”, IEEE Transactions on Energy Conversion, Vol.19, No.2, 2004, pp384-391.

[17] Haluk GOZDE et al, PSO based Load Frequency Control in a single area power system, University of Pitesti, Scientific Bulletin, Vol.2, No.8, 2008, pp106-110.
[18]Karl O.Jones,, "Comparision of Genetic Algorithm and Particle Swarm Optimization", International Conference on Computer systems an Technologies, 2005 ppIIIA.1-6.
[19] A.Soundarrajan, et al., "Intelligent controllers for Automatic Generation Control"., In the proceedings of International conference on Robotics, Vision, Information and signal Processing, January, 2003. pp307-311.
[20] A.Soundarrajan and S.Sumathi, "GA based PID for Load Frequency control", Journal for Advances in Computational science and technology, 2009, Vol.1, No.2